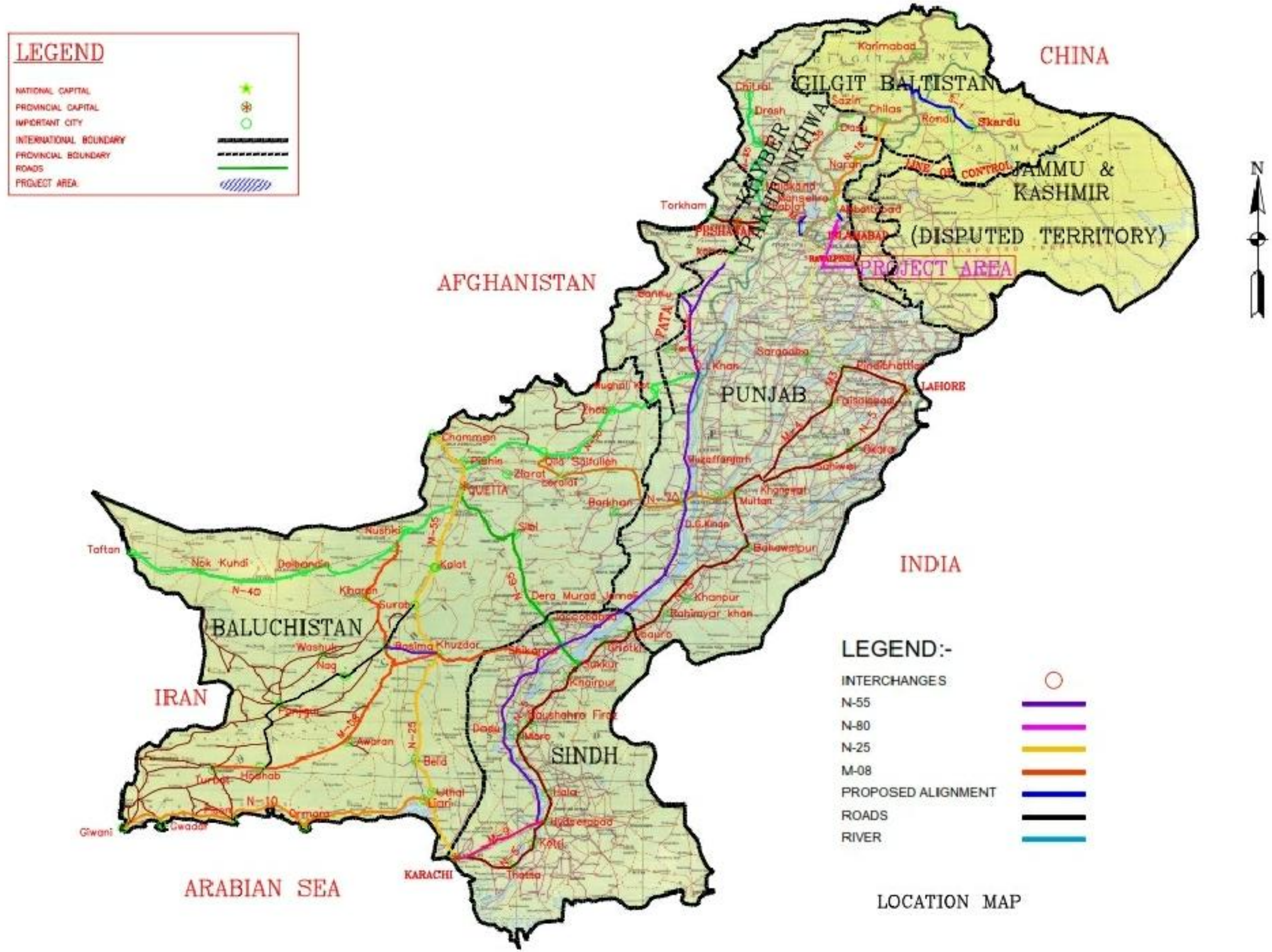

CLIENT:	CONSULTANT:					DRAWN	PROJECT:	TITLE:
KHYBER PAKHTUNKHWA INTEGRATED TOURISM AND ENTERPRISE DEVELOPMENT PROJECT C&W DEPARTMENT KP	NATIONAL ENGINEERING SERVICES PAKISTAN (PVT.) LTD.				SUBMITTED		**REHABILITATION AND REMODELING OF MANKIAL BADA SARAI ROAD IN DISTRICT SWAT - 22 KM LOT-01: KM 0+000 ~ 09+300**	KEY MAP
					RECOMMNED			
					CHD./VER			DATE: JANUARY 2022 / DWG. NO 38164/102/TD/ RLP/LOT-01/KM
		REV	DATE	DESCRIPTION	APPROVED			

CLIENT:	CONSULTANT:					DRAWN	PROJECT:	TITLE:
KHYBER PAKHTUNKHWA INTEGRATED TOURISM AND ENTERPRISE DEVELOPMENT PROJECT C&W DEPARTMENT KP	NATIONAL ENGINEERING SERVICES PAKISTAN (PVT.) LTD.				SUBMITTED		REHABILITATION AND REMODELING OF MANKIAL BADA SARAI ROAD IN DISTRICT SWAT - 22 KM LOT-01: KM 0+000 ~ 09+300	ROUTE LOCATION PLAN
					RECOMMNED			
					CHD./VER			DATE: JANUARY 2022 / DWG. NO 38164/102/TD/ RLP/LOT-01/01
		REV	DATE	DESCRIPTION	APPROVED			

CLIENT:	CONSULTANT:					DRAWN	PROJECT:	TITLE:
KHYBER PAKHTUNKHWA INTEGRATED TOURISM AND ENTERPRISE DEVELOPMENT PROJECT C&W DEPARTMENT KP	NATIONAL ENGINEERING SERVICES PAKISTAN (PVT.) LTD.				SUBMITTED		REHABILITATION AND REMODELING OF MANKIAL BADA SARAI ROAD IN DISTRICT SWAT - 22 KM LOT-01: KM 0+000 ~ 09+300	ROUTE LOCATION PLAN
					RECOMMNED			
					CHD./VER			DATE: JANUARY 2022 / DWG. NO 38164/102/TD/ RLP/LOT-01/02
		REV	DATE	DESCRIPTION	APPROVED			

CLIENT:	CONSULTANT:					DRAWN	PROJECT:	TITLE:
KHYBER PAKHTUNKHWA INTEGRATED TOURISM AND ENTERPRISE DEVELOPMENT PROJECT C&W DEPARTMENT KP	NATIONAL ENGINEERING SERVICES PAKISTAN (PVT.) LTD.				SUBMITTED		**REHABILITATION AND REMODELING OF MANKIAL BADA SARAI ROAD IN DISTRICT SWAT - 22 KM LOT-01: KM 0+000 ~ 09+300**	ROUTE LOCATION PLAN
					RECOMMNED			
					CHD./VER			DATE: JANUARY 2022 / DWG. NO 38164/102/TD/ RLP/LOT-01/03
		REV	DATE	DESCRIPTION	APPROVED			

CLIENT:	CONSULTANT:					DRAWN	PROJECT:	TITLE:
KHYBER PAKHTUNKHWA INTEGRATED TOURISM AND ENTERPRISE DEVELOPMENT PROJECT C&W DEPARTMENT KP	NATIONAL ENGINEERING SERVICES PAKISTAN (PVT.) LTD.				SUBMITTED		**REHABILITATION AND REMODELING OF MANKIAL BADA SARAI ROAD IN DISTRICT SWAT - 22 KM LOT-01: KM 0+000 ~ 09+300**	ROUTE LOCATION PLAN
					RECOMMNED			
					CHD./VER			DATE: JANUARY 2022 / DWG. NO 38164/102/TD/ RLP/LOT-01/04
		REV	DATE	DESCRIPTION	APPROVED			

CLIENT:	CONSULTANT:					DRAWN	PROJECT:	TITLE:
KHYBER PAKHTUNKHWA INTEGRATED TOURISM AND ENTERPRISE DEVELOPMENT PROJECT C&W DEPARTMENT KP	NATIONAL ENGINEERING SERVICES PAKISTAN (PVT.) LTD.				SUBMITTED		REHABILITATION AND REMODELING OF MANKIAL BADA SARAI ROAD IN DISTRICT SWAT - 22 KM LOT-01: KM 0+000 ~ 09+300	ROUTE LOCATION PLAN
					RECOMMNED			
					CHD./VER			DATE: JANUARY 2022 / DWG. NO 38164/102/TD/ RLP/LOT-01/05
		REV	DATE	DESCRIPTION	APPROVED			

CLIENT:	CONSULTANT:					DRAWN	PROJECT:	TITLE:
KHYBER PAKHTUNKHWA INTEGRATED TOURISM AND ENTERPRISE DEVELOPMENT PROJECT C&W DEPARTMENT KP	NATIONAL ENGINEERING SERVICES PAKISTAN (PVT.) LTD.				SUBMITTED		REHABILITATION AND REMODELING OF MANKIAL BADA SARAI ROAD IN DISTRICT SWAT - 22 KM LOT-01: KM 0+000 ~ 09+300	ROUTE LOCATION PLAN
					RECOMMNED			
					CHD./VER			DATE: JANUARY 2022 / DWG. NO 38164/102/TD/ RLP/LOT-01/06
		REV	DATE	DESCRIPTION	APPROVED			

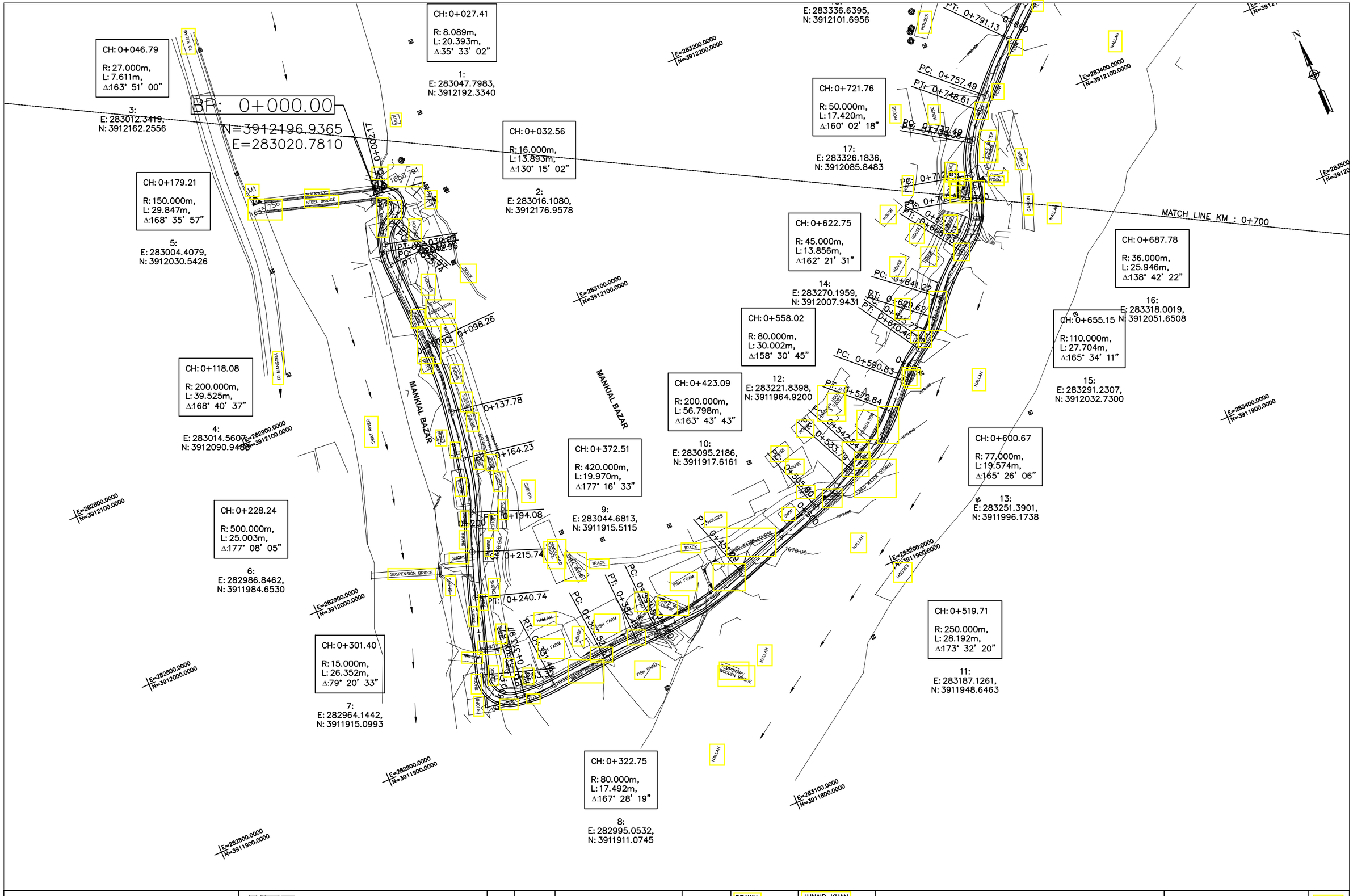

MANKIAL TO JABBAH ROAD SWAT-R1-Final.dwg

KHYBER PAKHTUNKHWA
INTEGRATED TOURISM AND ENTERPRISE DEVELOPMENT PROJECT
COMMUNICATION & WORKS (C&W) DEPARTMENT, KPK

NATIONAL ENGINEERING SERVICES PAKISTAN (PVT.) LTD.

REV.	DATE	DESCRIPTION	APPROVED

DRAWN	JUNAID KHAN
SUBMITTED	NOSHERWAN NAEEM
RECOMMENDED	
CHD./VER.	
APPROVED	

REHABILITATION AND REMODELING OF MANKIAL BADA SARAI ROAD IN DISTRICT SWAT - 22 KM
LOT-01: KM 0+000 ~ 09+300

PLAN
KM: 0+000 ~ KM: 0+700

SCALE 1:2000

DATE January 2022

DWG NO. 4169/(iii)/TD/P 1

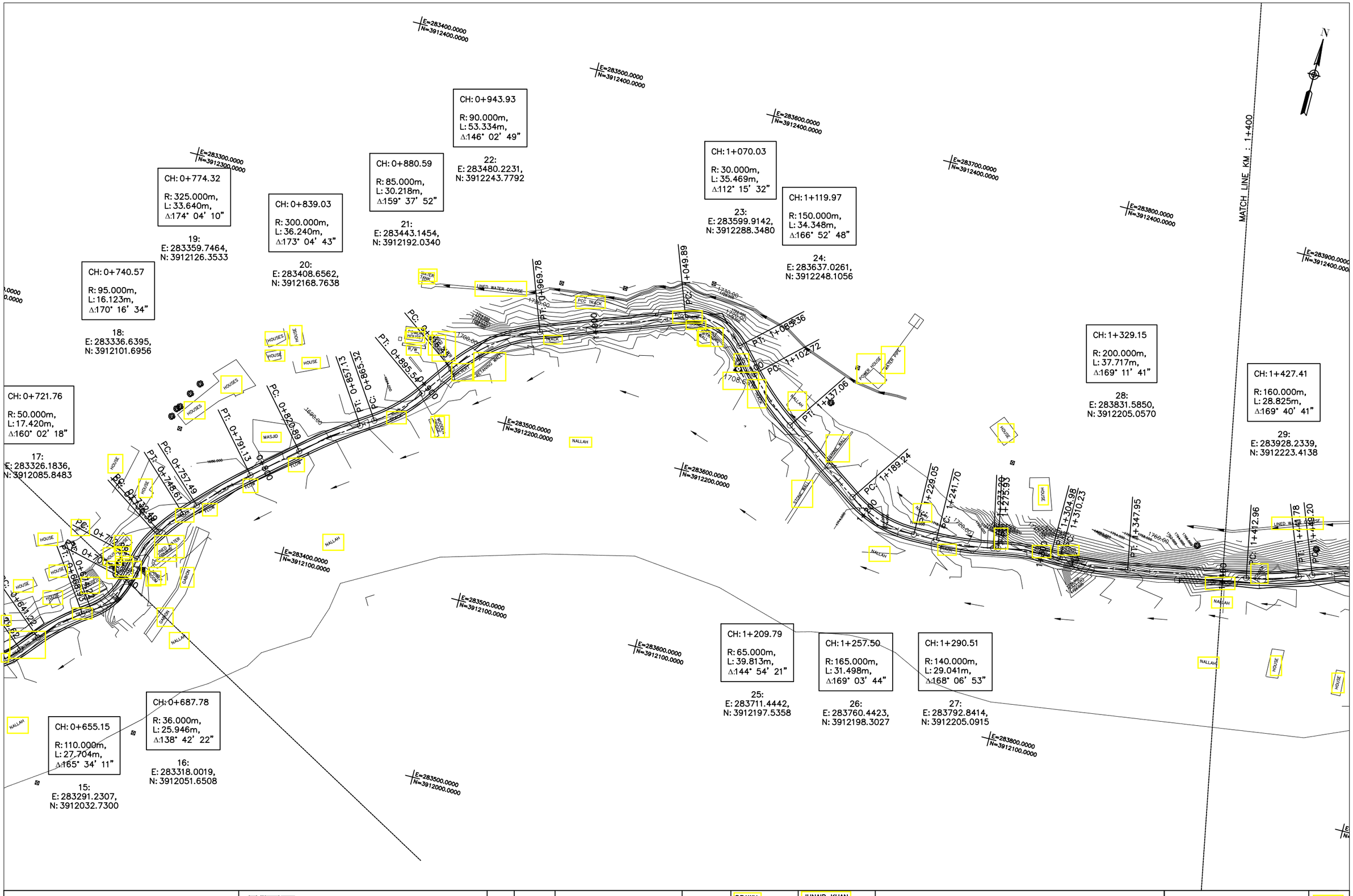

KHYBER PAKHTUNKHWA
INTEGRATED TOURISM AND
ENTERPRISE DEVELOPMENT
PROJECT
COMMUNICATION & WORKS (C&W)
DEPARTMENT, KPK

NATIONAL ENGINEERING SERVICES
PAKISTAN (PVT.) LTD.

REV.	DATE	DESCRIPTION	APPROVED

DRAWN	JUNAID KHAN
SUBMITTED	NOSHERWAN NAEEM
RECOMMENDED	
CHD./VER.	
APPROVED	

REHABILITATION AND REMODELING OF MANKIAL BADA SARAI ROAD IN DISTRICT SWAT - 22 KM
LOT-01: KM 0+000 ~ 09+300

PLAN
KM: 0+700 ~ KM: 1+400

SCALE
1:2000

DATE
January 2022

DWG NO.
4169/(iii)/TD/P 2

MANKIAL TO JABBAH ROAD SWAT-R1-Final.dwg

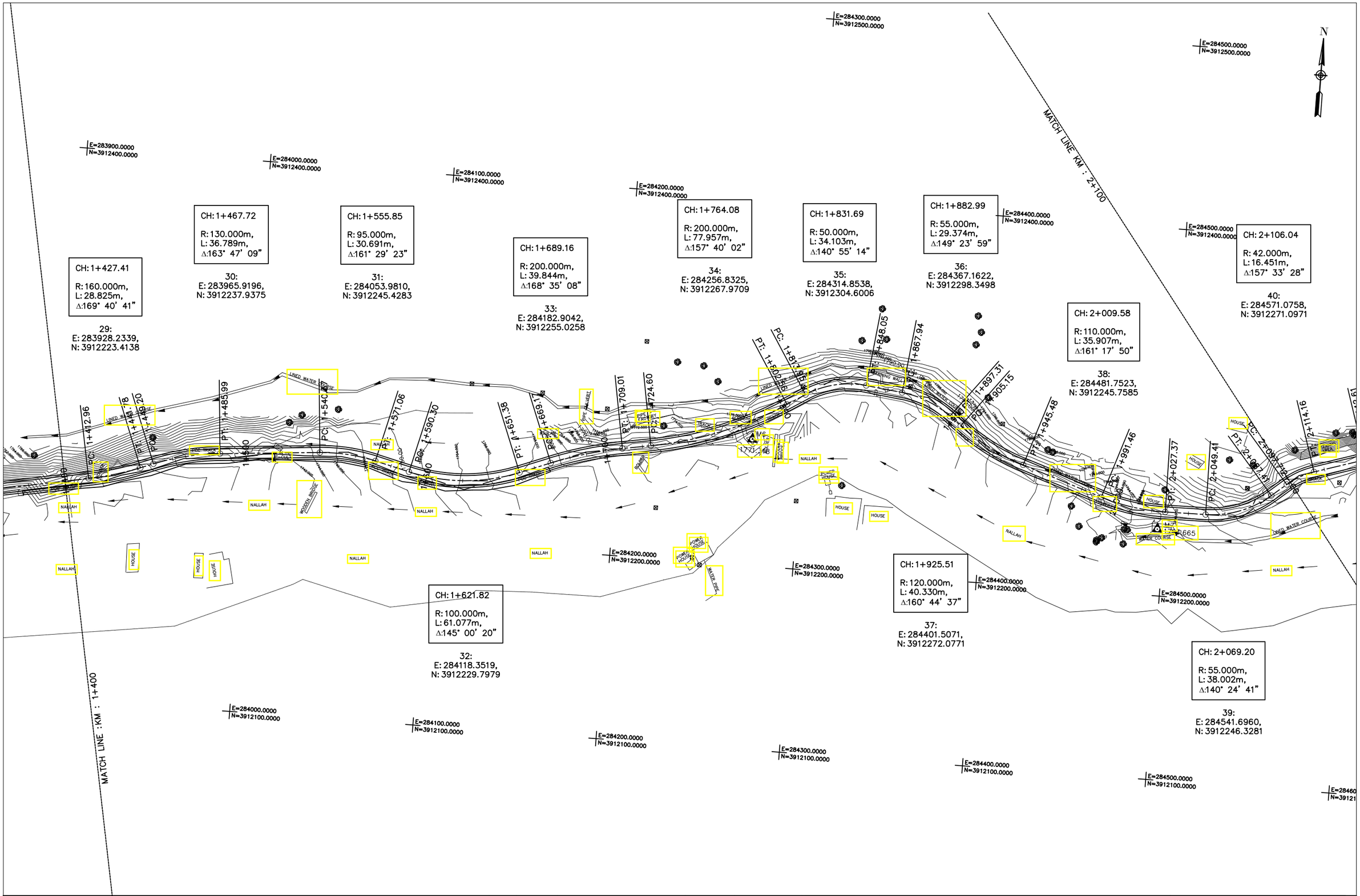

KHYBER PAKHTUNKHWA INTEGRATED TOURISM AND ENTERPRISE DEVELOPMENT PROJECT

COMMUNICATION & WORKS (C&W) DEPARTMENT, KPK

NATIONAL ENGINEERING SERVICES PAKISTAN (PVT.) LTD.

REV.	DATE	DESCRIPTION	APPROVED

DRAWN	JUNAID KHAN
SUBMITTED	NOSHERWAN NAEEM
RECOMMENDED	
CHD./VER.	
APPROVED	

REHABILITATION AND REMODELING OF MANKIAL BADA SARAI ROAD IN DISTRICT SWAT - 22 KM
LOT-01: KM 0+000 ~ 09+300

PLAN
KM: 1+400 ~ KM: 2+100

SCALE 1:2000

DATE January 2022

DWG NO. 4169/(iii)/TD/P 3

MANKIAL TO JABBAH ROAD SWAT-R1-Final.dwg

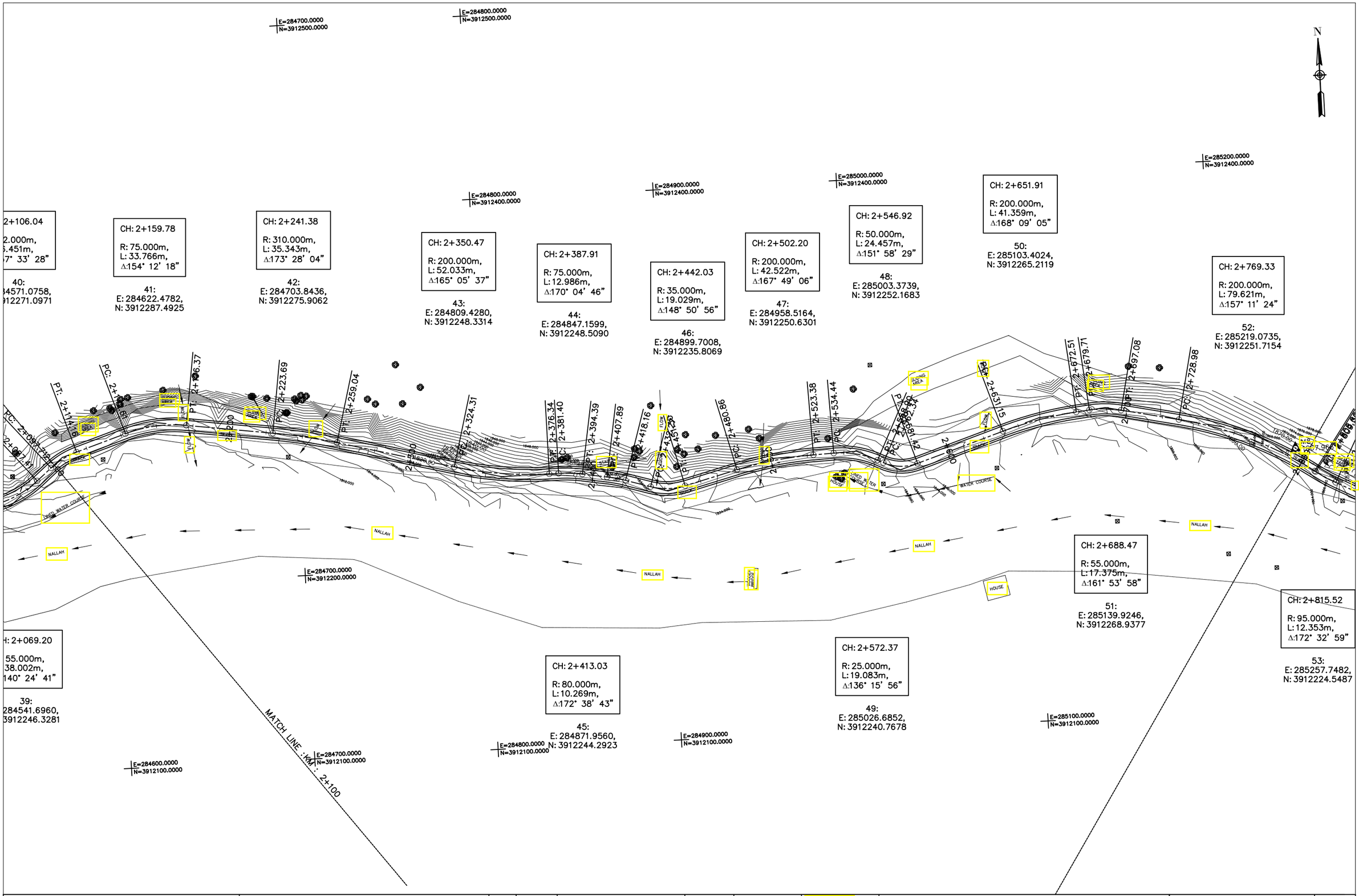

KHYBER PAKHTUNKHWA INTEGRATED TOURISM AND ENTERPRISE DEVELOPMENT PROJECT COMMUNICATION & WORKS (C&W) DEPARTMENT, KPK	NATIONAL ENGINEERING SERVICES PAKISTAN (PVT.) LTD.	DRAWN	JUNAID KHAN	REHABILITATION AND REMODELING OF MANKIAL BADA SARAI ROAD IN DISTRICT SWAT - 22 KM LOT-01: KM 0+000 ~ 09+300	PLAN KM: 2+100 ~ KM: 2+800
		SUBMITTED	NOSHERWAN NAEEM		SCALE 1:2000
		RECOMMENDED			
		CHD./VER.			DATE January 2022
	REV. / DATE / DESCRIPTION / APPROVED	APPROVED			DWG NO. 4169/(iii)/TD/P 4

MANKIAL TO JABBAH ROAD SWAT-R1-Final.dwg

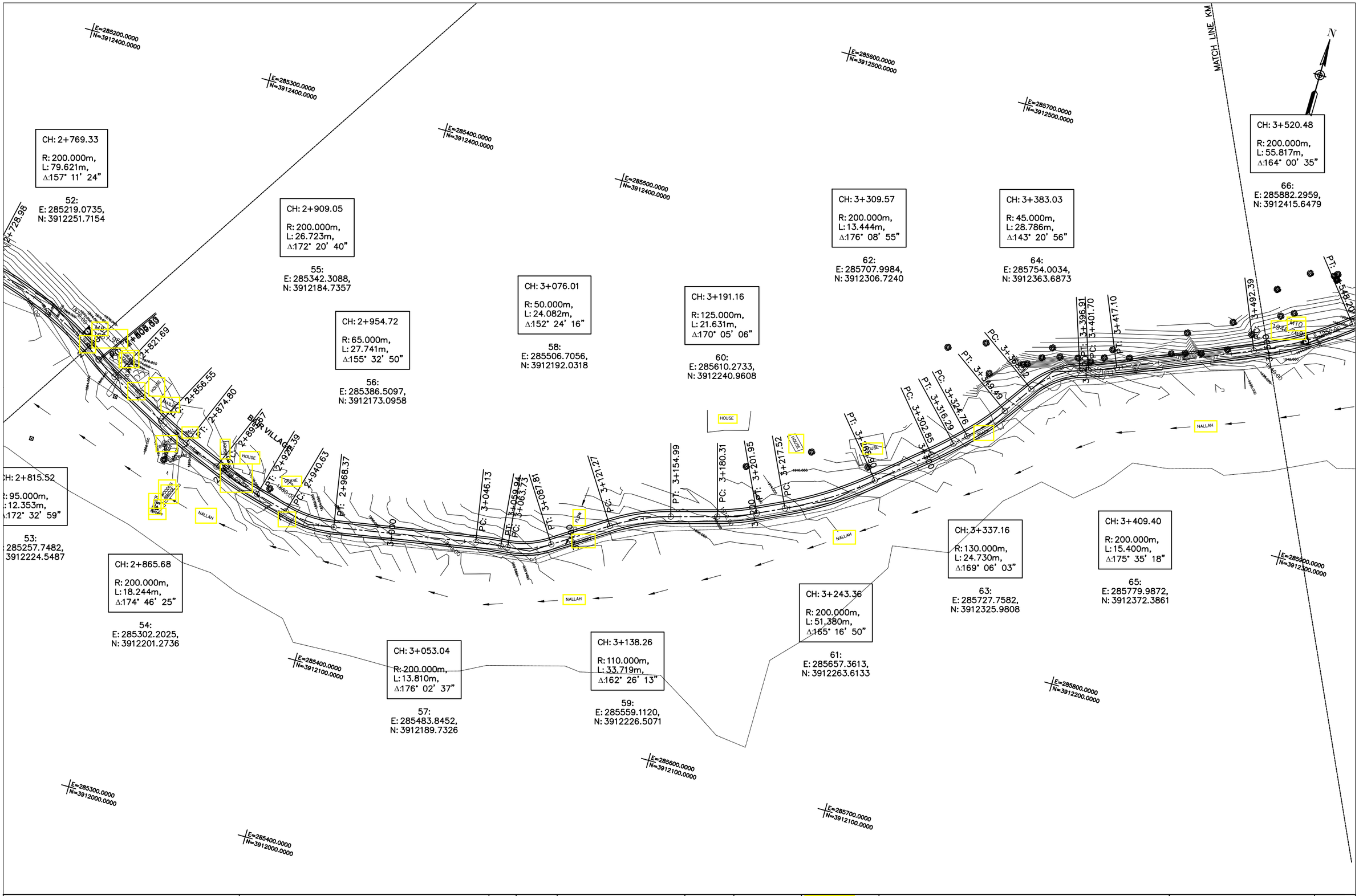

MANKIAL TO JABBAH ROAD SWAT-R1-Final.dwg

KHYBER PAKHTUNKHWA
INTEGRATED TOURISM AND
ENTERPRISE DEVELOPMENT
PROJECT
COMMUNICATION & WORKS (C&W)
DEPARTMENT, KPK

NATIONAL ENGINEERING SERVICES
PAKISTAN (PVT.) LTD.

REV.	DATE	DESCRIPTION	APPROVED

DRAWN	JUNAID KHAN
SUBMITTED	NOSHERWAN NAEEM
RECOMMENDED	
CHD./VER.	
APPROVED	

REHABILITATION AND REMODELING OF MANKIAL BADA SARAI ROAD IN DISTRICT SWAT - 22 KM
LOT-01: KM 0+000 ~ 09+300

PLAN
KM: 2+800 ~ KM: 3+500

SCALE
1:2000

DATE
January 2022

DWG NO.
4169/(iii)/TD/P 5

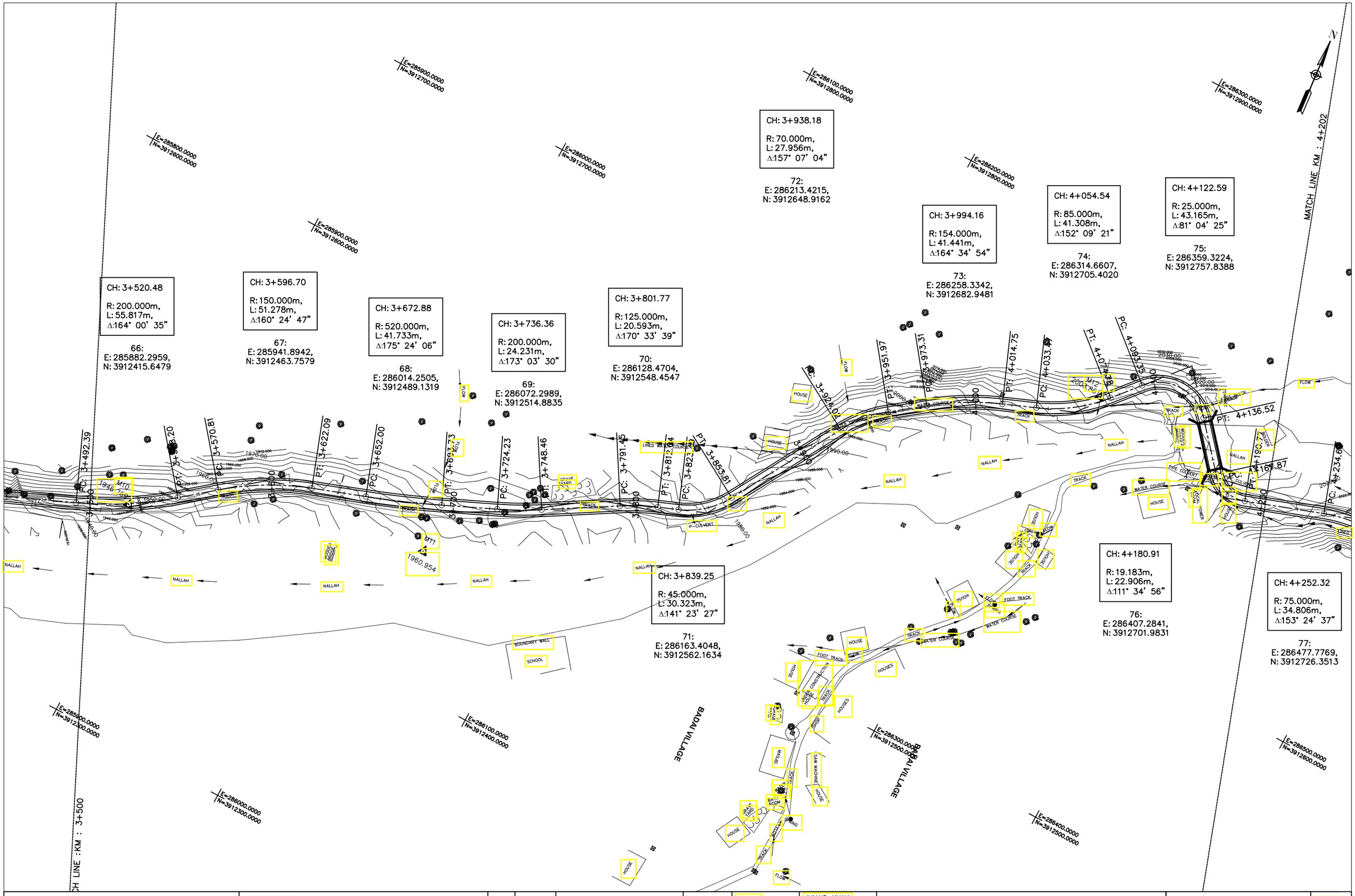

KHYBER PAKHTUNKHWA INTEGRATED TOURISM AND ENTERPRISE DEVELOPMENT PROJECT COMMUNICATION & WORKS (C&W) DEPARTMENT, KPK	NATIONAL ENGINEERING SERVICES PAKISTAN (PVT.) LTD.	DRAWN	JUNAID KHAN	REHABILITATION AND REMODELING OF MANKIAL BADA SARAI ROAD IN DISTRICT SWAT - 22 KM LOT-01: KM 0+000 ~ 09+300	PLAN KM: 3+500 ~ KM: 4+200
		SUBMITTED	NOSHERWAN NAEEM		SCALE 1:2000
		RECOMMENDED			
		CHD./VER.			
	REV. / DATE / DESCRIPTION	APPROVED			DATE January 2022
					DWG NO. 4169/(iii)/TD/P 6

MANKIAL TO JABBAH ROAD SWAT-R1-Final.dwg

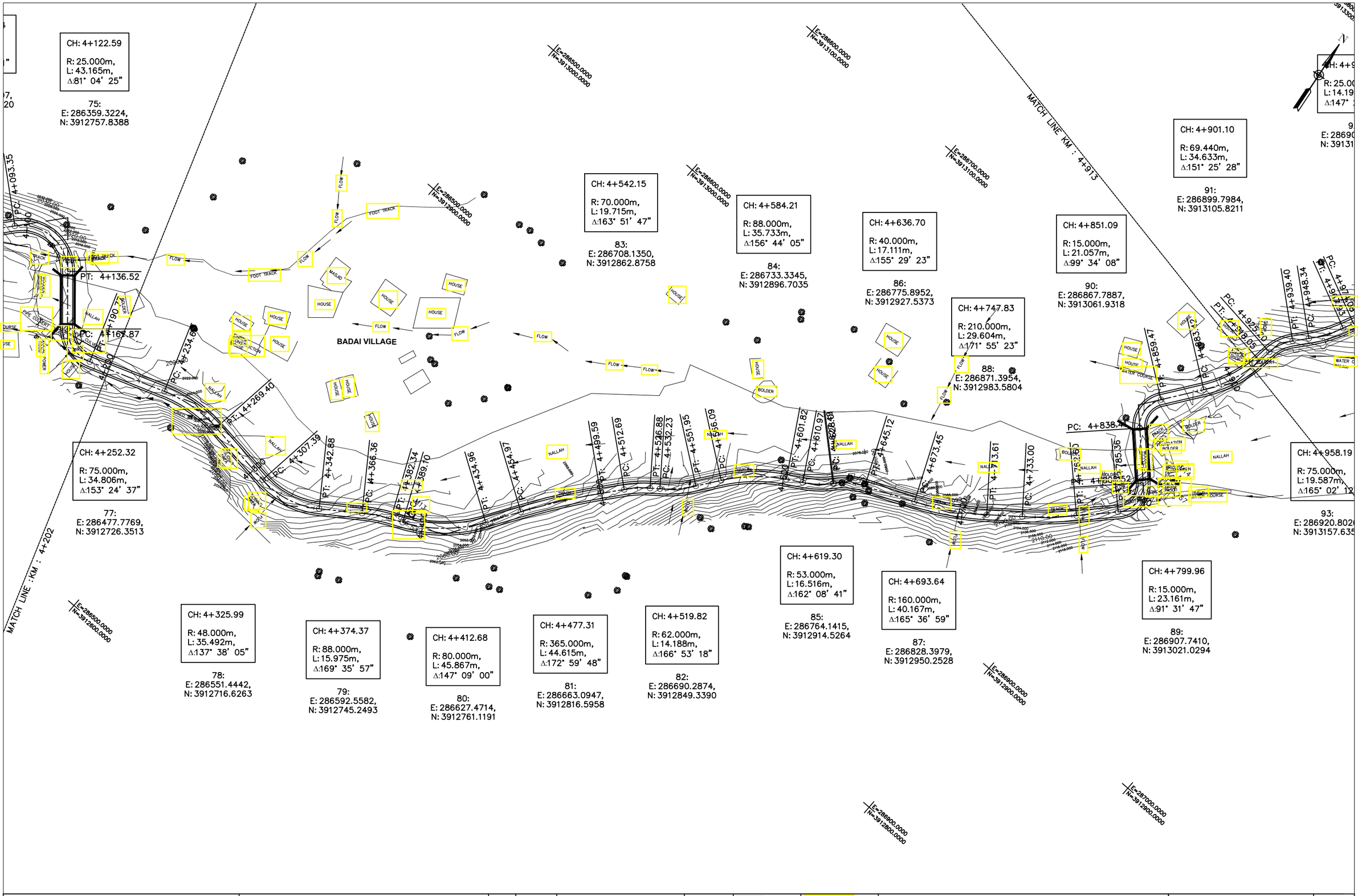

KHYBER PAKHTUNKHWA INTEGRATED TOURISM AND ENTERPRISE DEVELOPMENT PROJECT	NATIONAL ENGINEERING SERVICES PAKISTAN (PVT.) LTD.
COMMUNICATION & WORKS (C&W) DEPARTMENT, KPK	

REV.	DATE	DESCRIPTION	APPROVED

DRAWN	JUNAID KHAN
SUBMITTED	NOSHERWAN NAEEM
RECOMMENDED	
CHD./VER.	
APPROVED	

REHABILITATION AND REMODELING OF MANKIAL BADA SARAI ROAD IN DISTRICT SWAT - 22 KM
LOT-01: KM 0+000 ~ 09+300

PLAN
KM: 4+200 ~ KM: 4+900

SCALE 1:2000

DATE January 2022

DWG NO. 4169/(iii)/TD/P 7

MANKIAL TO JABBAH ROAD SWAT-R1-Final.dwg

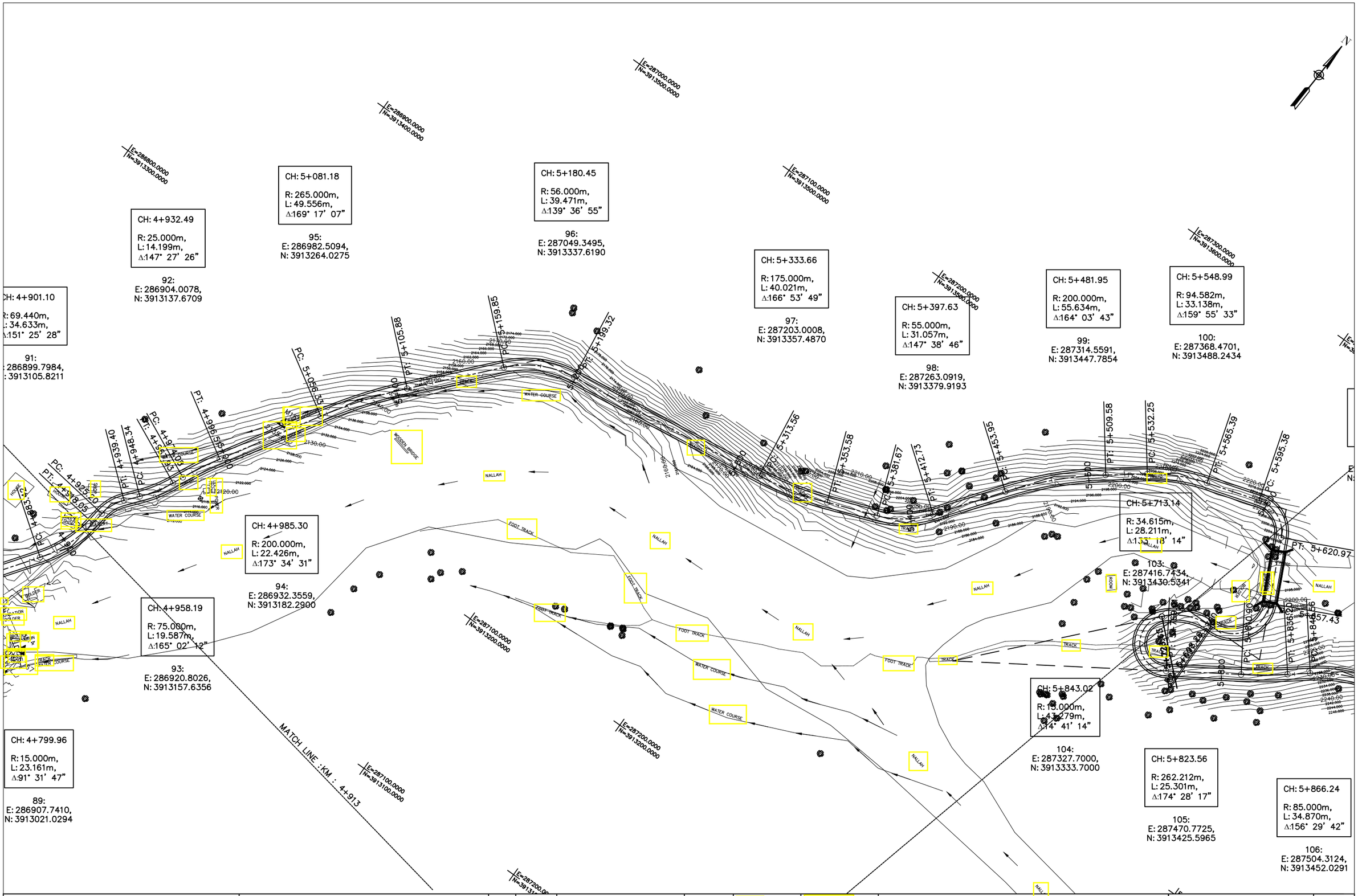

KHYBER PAKHTUNKHWA INTEGRATED TOURISM AND ENTERPRISE DEVELOPMENT PROJECT COMMUNICATION & WORKS (C&W) DEPARTMENT, KPK	NATIONAL ENGINEERING SERVICES PAKISTAN (PVT.) LTD.	DRAWN	JUNAID KHAN	REHABILITATION AND REMODELING OF MANKIAL BADA SARAI ROAD IN DISTRICT SWAT - 22 KM LOT-01: KM 0+000 ~ 09+300	PLAN KM: 4+900 ~ KM: 5+600
		SUBMITTED	NOSHERWAN NAEEM		SCALE 1:2000
		RECOMMENDED			
		CHD./VER.			DATE January 2022
	REV. / DATE / DESCRIPTION	APPROVED	APPROVED		DWG NO. 4169/(iii)/TD/P 8

MANKIAL TO JABBAH ROAD SWAT-R1-Final.dwg

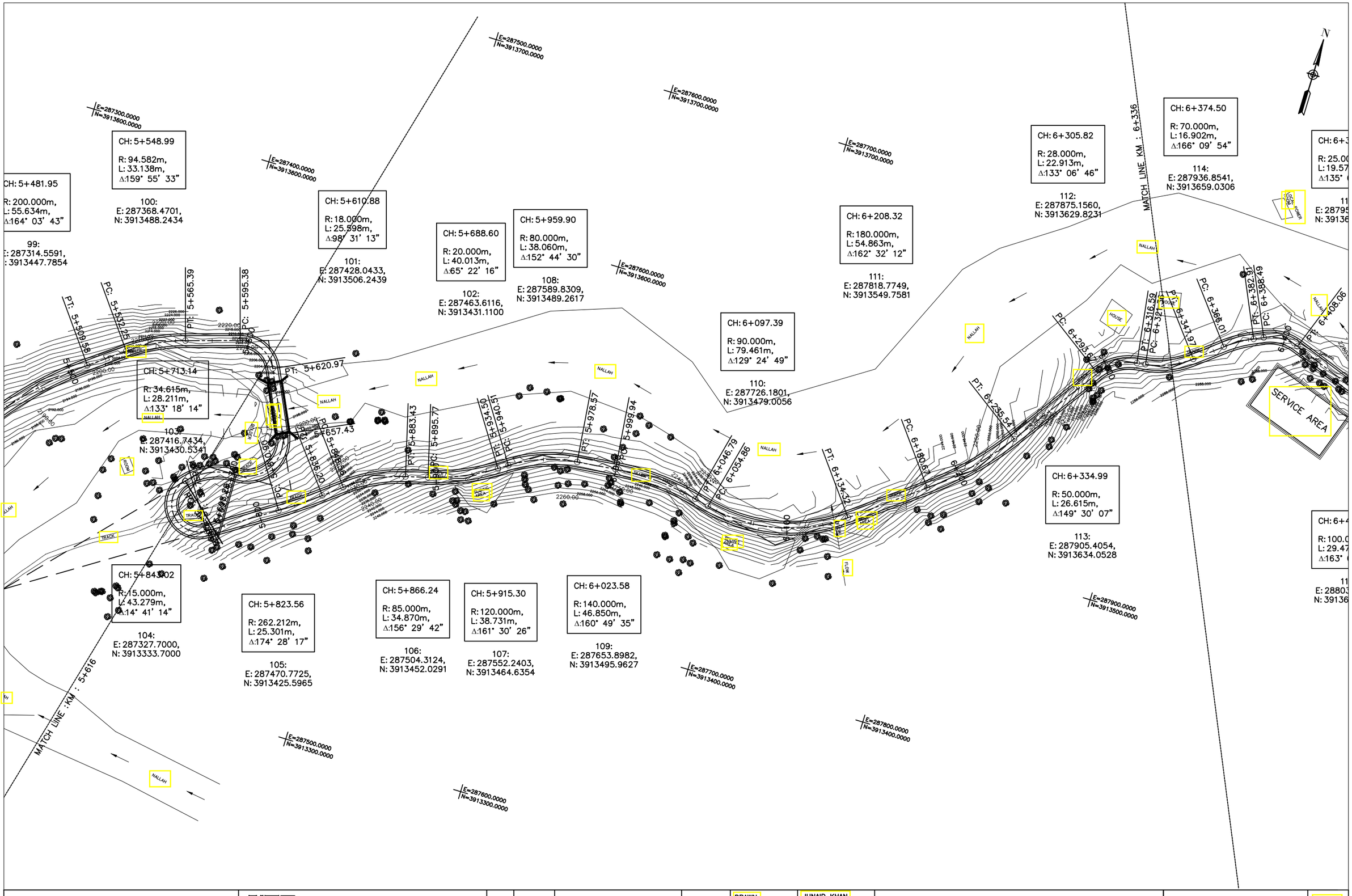

KHYBER PAKHTUNKHWA
INTEGRATED TOURISM AND
ENTERPRISE DEVELOPMENT
PROJECT
COMMUNICATION & WORKS (C&W)
DEPARTMENT, KPK

NATIONAL ENGINEERING SERVICES
PAKISTAN (PVT.) LTD.

REV.	DATE	DESCRIPTION	APPROVED		
				DRAWN	JUNAID KHAN
				SUBMITTED	NOSHERWAN NAEEM
				RECOMMENDED	
				CHD./VER.	
				APPROVED	

REHABILITATION AND REMODELING OF MANKIAL BADA SARAI ROAD IN DISTRICT SWAT - 22 KM
LOT-01: KM 0+000 ~ 09+300

PLAN
KM: 5+600 ~ KM: 6+300

SCALE
1:2000

DATE
January 2022

DWG NO.
4169/(iii)/TD/P 9

MANKIAL TO JABBAH ROAD SWAT-R1-Final.dwg

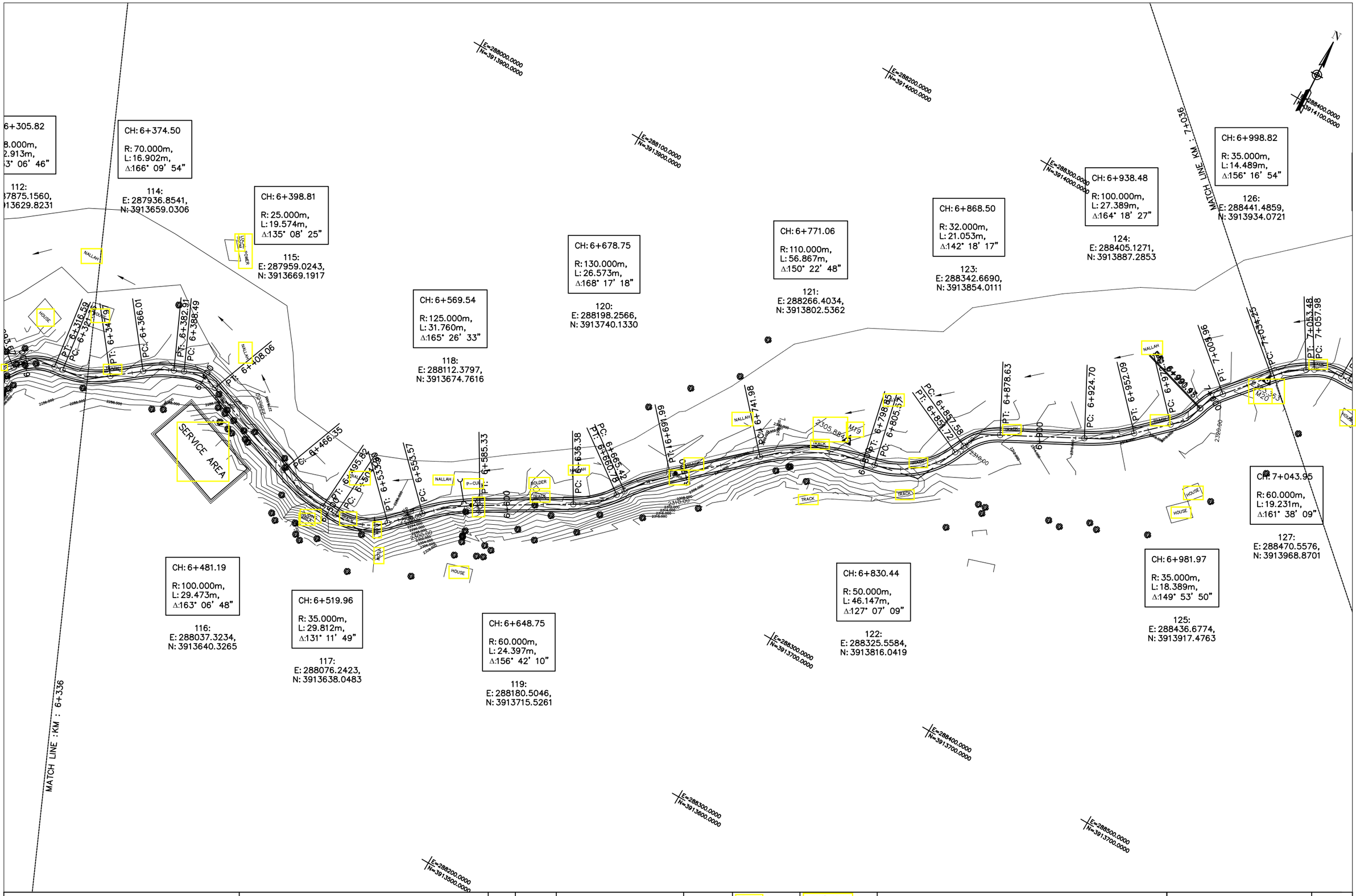

MANKIAL TO JABBAH ROAD SWAT-R1-Final.dwg

KHYBER PAKHTUNKHWA
INTEGRATED TOURISM AND
ENTERPRISE DEVELOPMENT
PROJECT
COMMUNICATION & WORKS (C&W)
DEPARTMENT, KPK

NATIONAL ENGINEERING SERVICES
PAKISTAN (PVT.) LTD.

REV.	DATE	DESCRIPTION	APPROVED

DRAWN	JUNAID KHAN
SUBMITTED	NOSHERWAN NAEEM
RECOMMENDED	
CHD./VER.	
APPROVED	

REHABILITATION AND REMODELING OF MANKIAL BADA SARAI ROAD IN DISTRICT SWAT - 22 KM
LOT-01: KM 0+000 ~ 09+300

PLAN
KM: 6+300 ~ KM: 7+000

SCALE
1:2000

DATE
January 2022

DWG NO.
4169/(iii)/TD/P 10

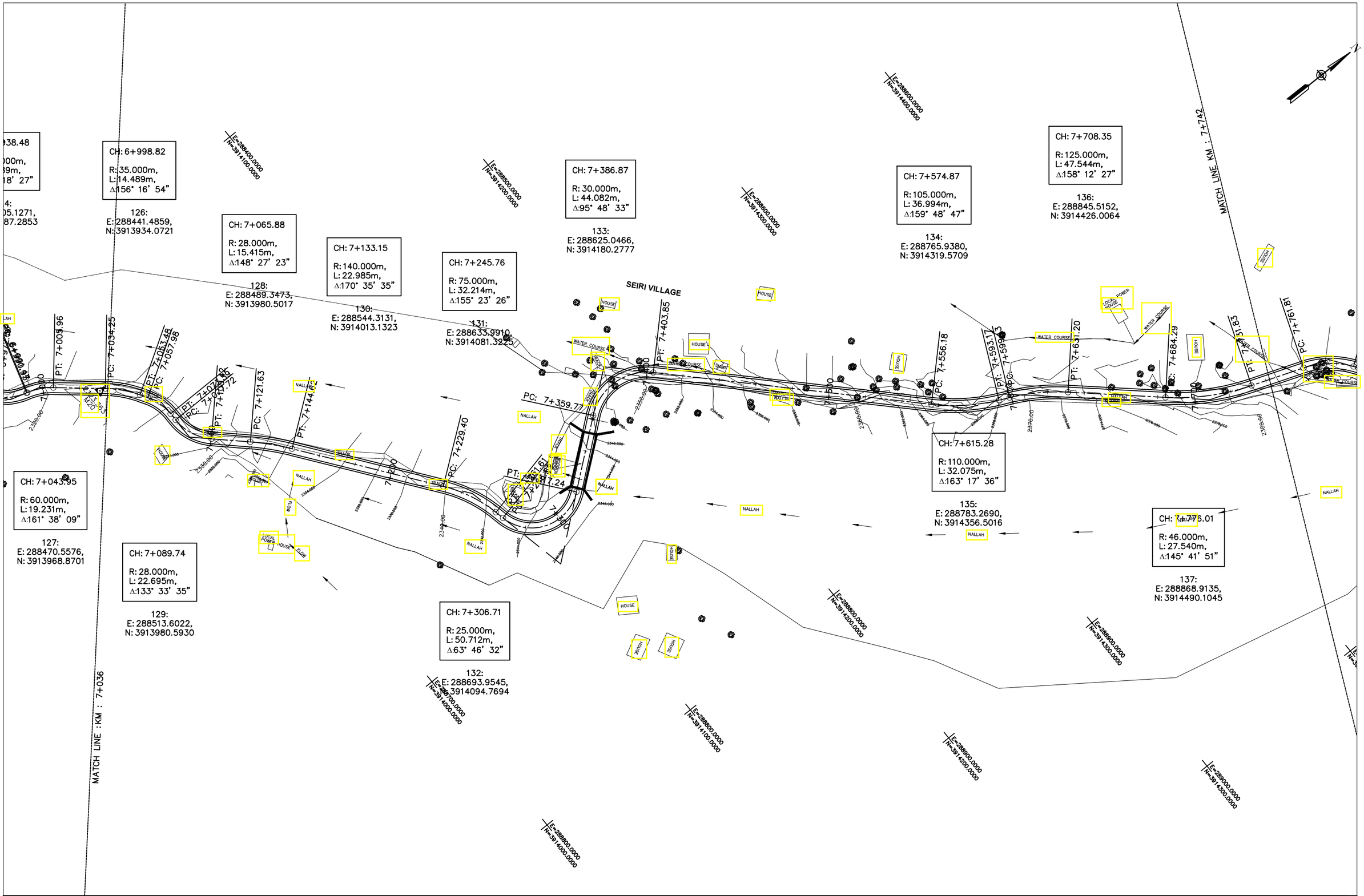

KHYBER PAKHTUNKHWA INTEGRATED TOURISM AND ENTERPRISE DEVELOPMENT PROJECT

COMMUNICATION & WORKS (C&W) DEPARTMENT, KPK

NATIONAL ENGINEERING SERVICES PAKISTAN (PVT.) LTD.

REV.	DATE	DESCRIPTION	APPROVED

DRAWN	JUNAID KHAN
SUBMITTED	NOSHERWAN NAEEM
RECOMMENDED	
CHD./VER.	
APPROVED	

REHABILITATION AND REMODELING OF MANKIAL BADA SARAI ROAD IN DISTRICT SWAT - 22 KM
LOT-01: KM 0+000 ~ 09+300

PLAN
KM: 7+000 ~ KM: 7+700

SCALE 1:2000

DATE January 2022

DWG NO. 4169/(iii)/TD/P 11

MANKIAL TO JABBAH ROAD SWAT-R1-Final.dwg

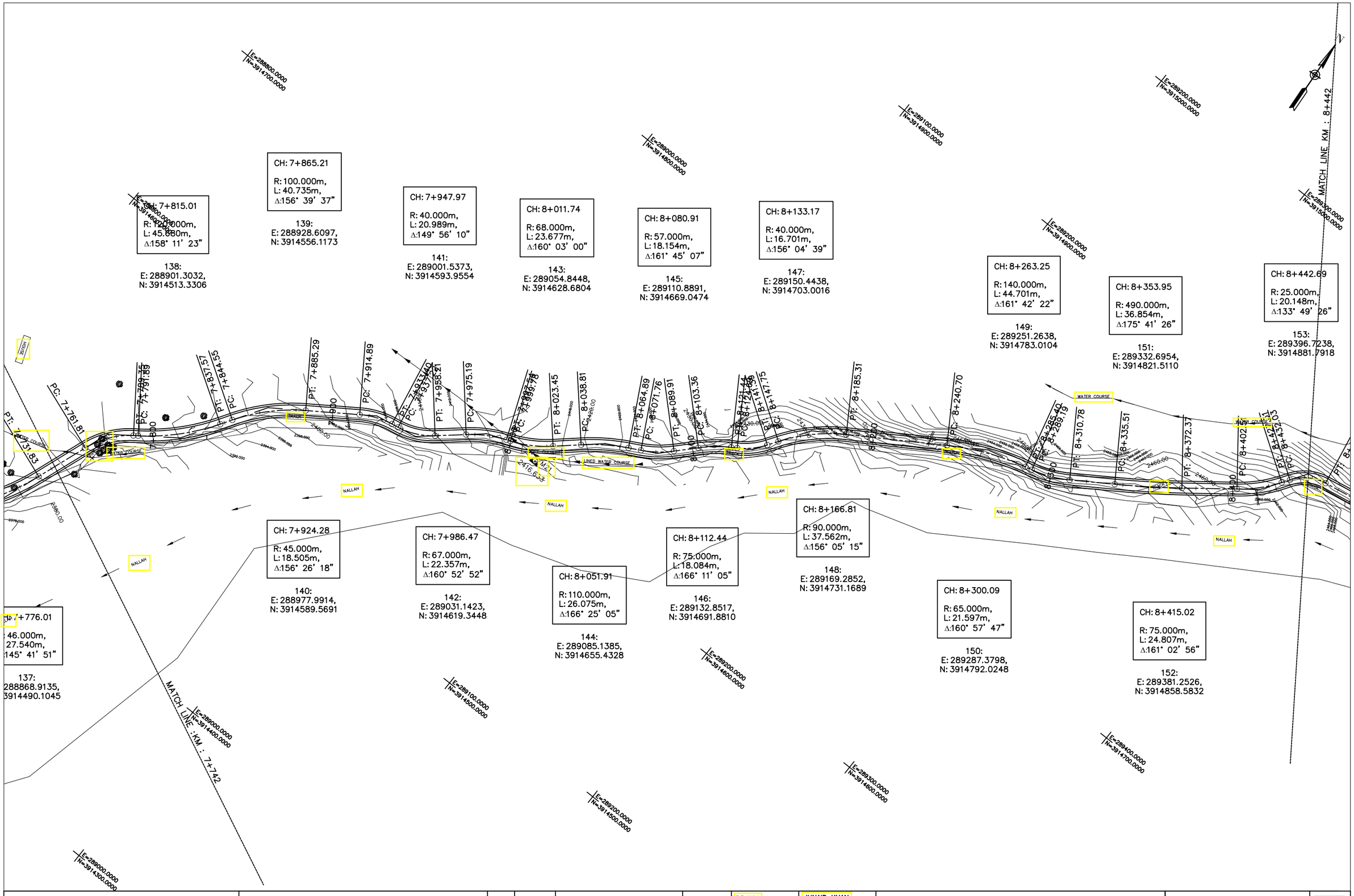

KHYBER PAKHTUNKHWA
INTEGRATED TOURISM AND
ENTERPRISE DEVELOPMENT
PROJECT
COMMUNICATION & WORKS (C&W)
DEPARTMENT, KPK

NATIONAL ENGINEERING SERVICES
PAKISTAN (PVT.) LTD.

REV.	DATE	DESCRIPTION	APPROVED

DRAWN	JUNAID KHAN
SUBMITTED	NOSHERWAN NAEEM
RECOMMENDED	
CHD./VER.	
APPROVED	

REHABILITATION AND REMODELING OF MANKIAL BADA SARAI ROAD IN DISTRICT SWAT - 22 KM
LOT-01: KM 0+000 ~ 09+300

PLAN
KM: 7+700 ~ KM: 8+400

SCALE
1:2000

DATE
January 2022

DWG NO.
4169/(iii)/TD/P 12

MANKIAL TO JABBAH ROAD SWAT-R1-Final.dwg

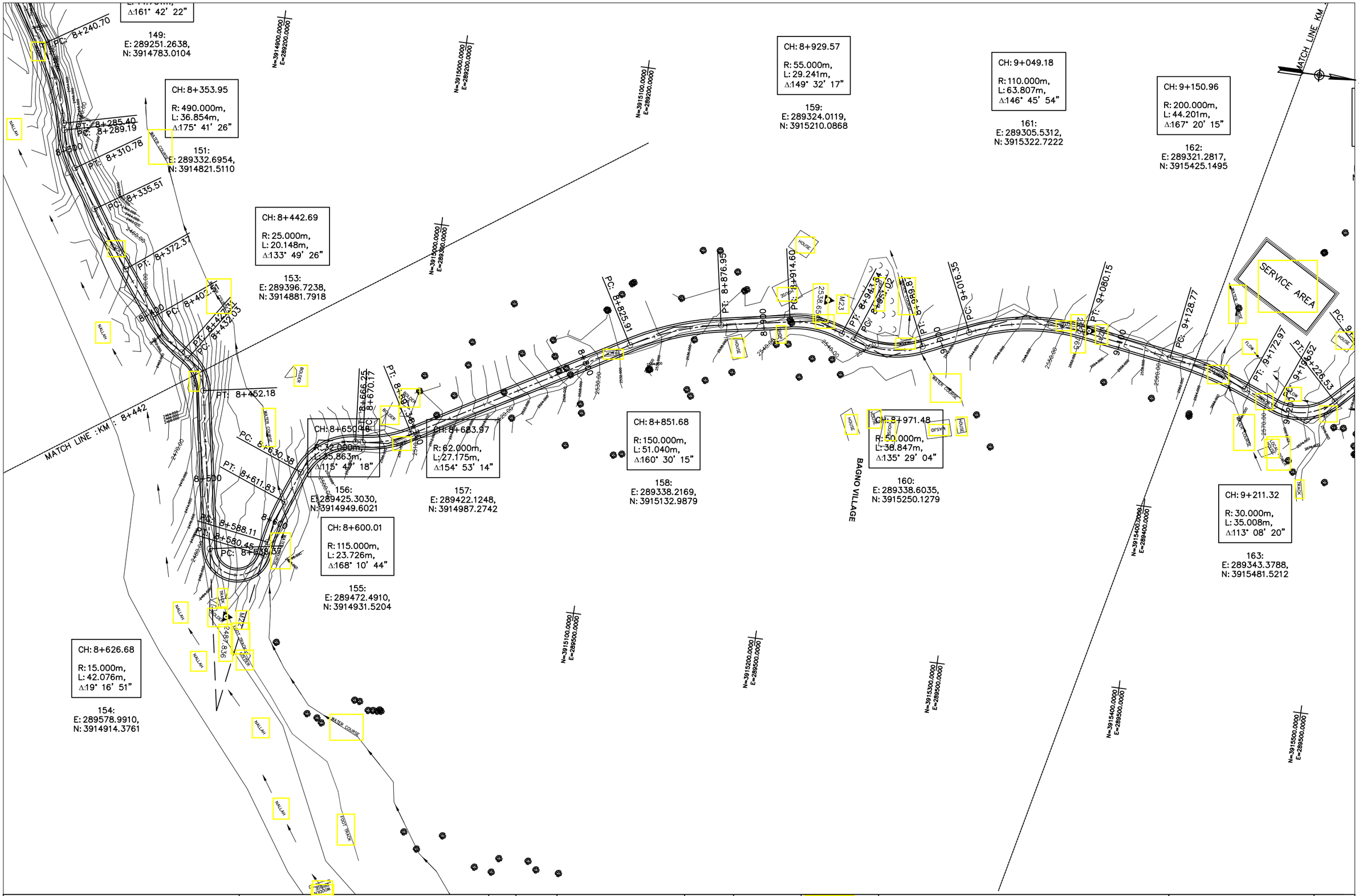

MANKIAL TO JABBAH ROAD SWAT-R1-Final.dwg

KHYBER PAKHTUNKHWA
INTEGRATED TOURISM AND
ENTERPRISE DEVELOPMENT
PROJECT
COMMUNICATION & WORKS (C&W)
DEPARTMENT, KPK

NATIONAL ENGINEERING SERVICES
PAKISTAN (PVT.) LTD.

REV.	DATE	DESCRIPTION	APPROVED

DRAWN	JUNAID KHAN
SUBMITTED	NOSHERWAN NAEEM
RECOMMENDED	
CHD./VER.	
APPROVED	

REHABILITATION AND REMODELING OF MANKIAL BADA SARAI ROAD IN DISTRICT SWAT - 22 KM
LOT-01: KM 0+000 ~ 09+300

PLAN
KM: 8+400 ~ KM: 9+100

SCALE 1:2000

DATE January 2022

DWG NO. 4169/(iii)/TD/P 13

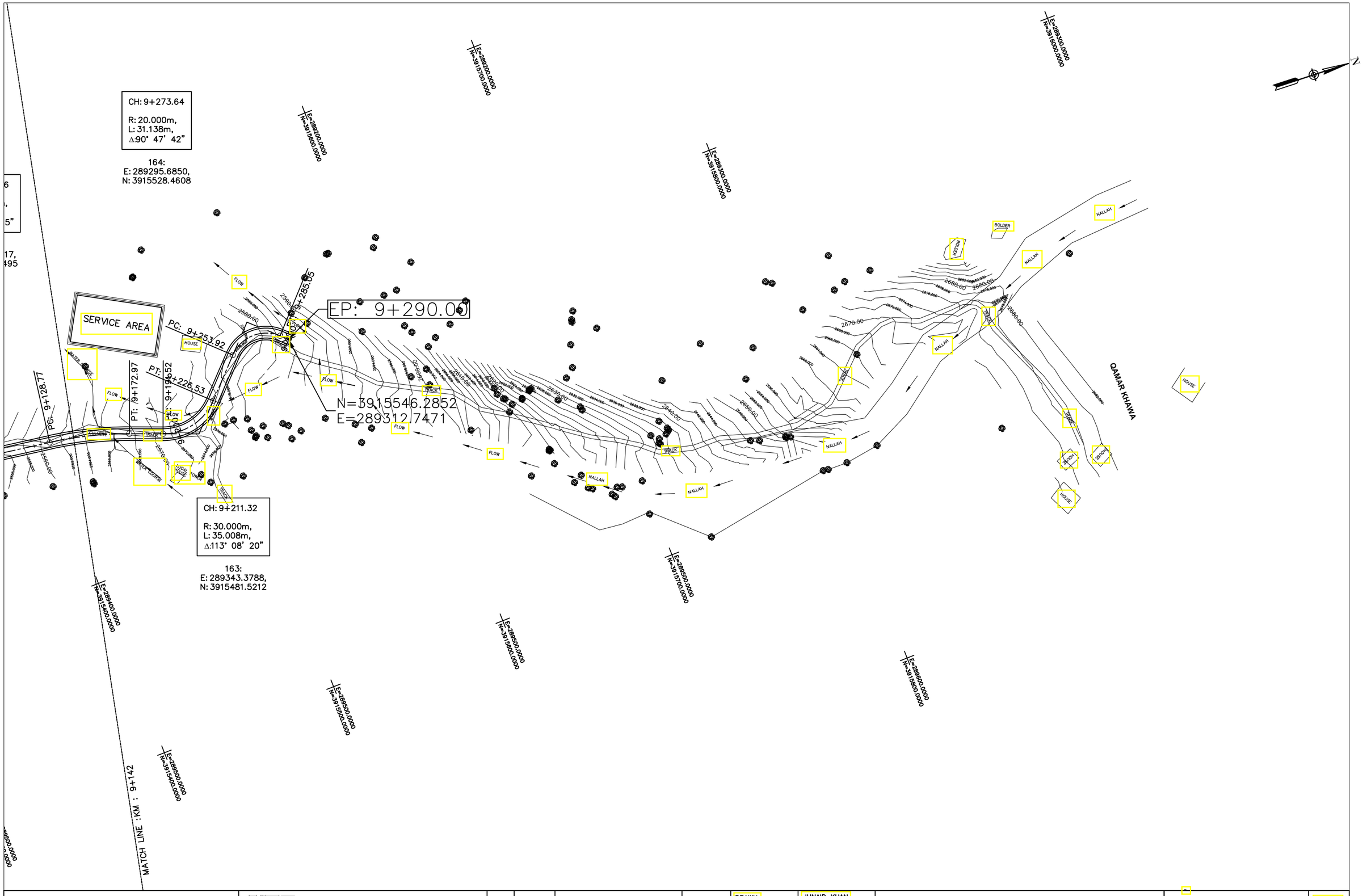

KHYBER PAKHTUNKHWA INTEGRATED TOURISM AND ENTERPRISE DEVELOPMENT PROJECT

COMMUNICATION & WORKS (C&W) DEPARTMENT, KPK

NATIONAL ENGINEERING SERVICES PAKISTAN (PVT.) LTD.

REV.	DATE	DESCRIPTION	APPROVED

DRAWN	JUNAID KHAN
SUBMITTED	NOSHERWAN NAEEM
RECOMMENDED	
CHD./VER.	
APPROVED	

REHABILITATION AND REMODELING OF MANKIAL BADA SARAI ROAD IN DISTRICT SWAT - 22 KM
LOT-01: KM 0+000 ~ 09+300

PLAN
KM: 9+100 ~ KM: 9+777

SCALE 1:2000

DATE January 2022

DWG NO. 4169/(iii)/TD/P 14

MANKIAL TO JABBAH ROAD SWAT-R1-Final.dwg

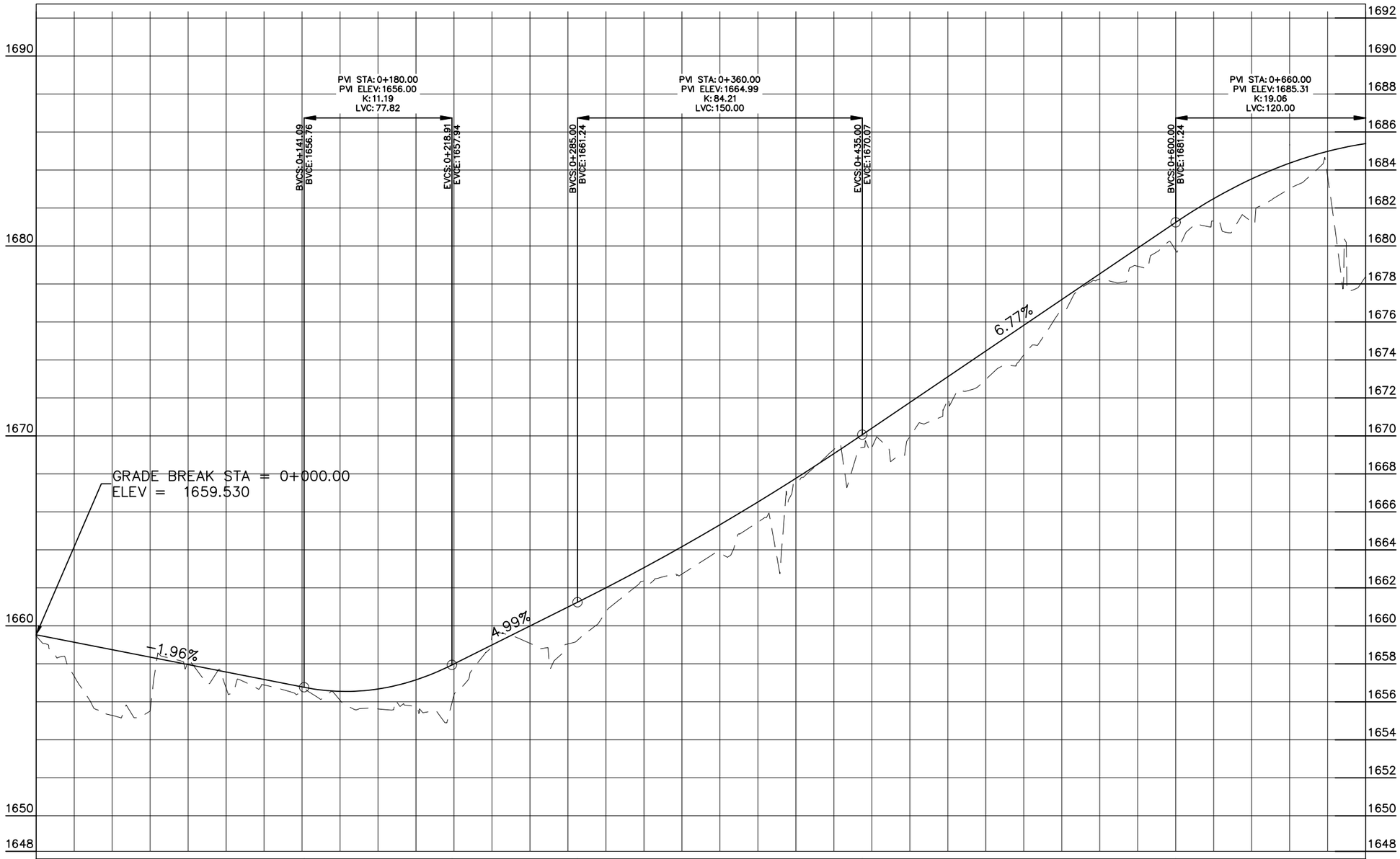

Vertical Geometry	L=141.09 G=−1.96%	77.82	L=66.09 G=4.99%	150.00	L=165.00 G=6.77%	120.00

Design Levels	1659.530	1659.138	1658.745	1658.353	1657.961	1657.569	1657.177	1656.784	1656.552	1656.676	1657.158	1657.997	1658.995	1659.994	1660.992	1662.004	1663.062	1664.167	1665.320	1666.520	1667.768	1669.063	1670.404	1671.759	1673.114	1674.468	1675.823	1677.178	1678.532	1679.887	1681.242	1682.491	1683.531	1684.362	1684.982	1685.392
Ground Levels	1659.530	1657.342	1655.286	1655.514	1658.105	1656.721	1656.884	1656.547	1656.079	1655.627	1655.762	1656.368	1659.503	1659.080	1659.048	1660.747	1662.371	1662.727	1663.831	1665.461	1667.511	1669.287	1669.382	1669.961	1671.890	1672.976	1674.259	1676.580	1678.260	1678.936	1679.770	1681.311	1681.271	1683.037	1683.648	1678.393

0+000 0+100 0+200 0+300 0+400 0+500 0+600 0+700

MANKIAL TO JABBAH ROAD SWAT-R1-Final.dwg

KHYBER PAKHTUNKHWA INTEGRATED TOURISM AND ENTERPRISE DEVELOPMENT PROJECT
COMMUNICATION & WORKS (C&W) DEPARTMENT, KPK

NATIONAL ENGINEERING SERVICES PAKISTAN (PVT.) LTD.

REV.	DATE	DESCRIPTION	APPROVED

DRAWN	JUNAID KHAN
SUBMITTED	NOSHERWAN NAEEM
RECOMMENDED	
CHD./VER.	
APPROVED	

REHABILITATION AND REMODELING OF MANKIAL BADA SARAI ROAD IN DISTRICT SWAT - 22 KM
LOT-01: KM 0+000 ~ 09+300

PROFILE
KM: 0+000 ~ KM: 0+700

DATE: January 2022
DWG NO.: 4169/(iii)/TD/P 001

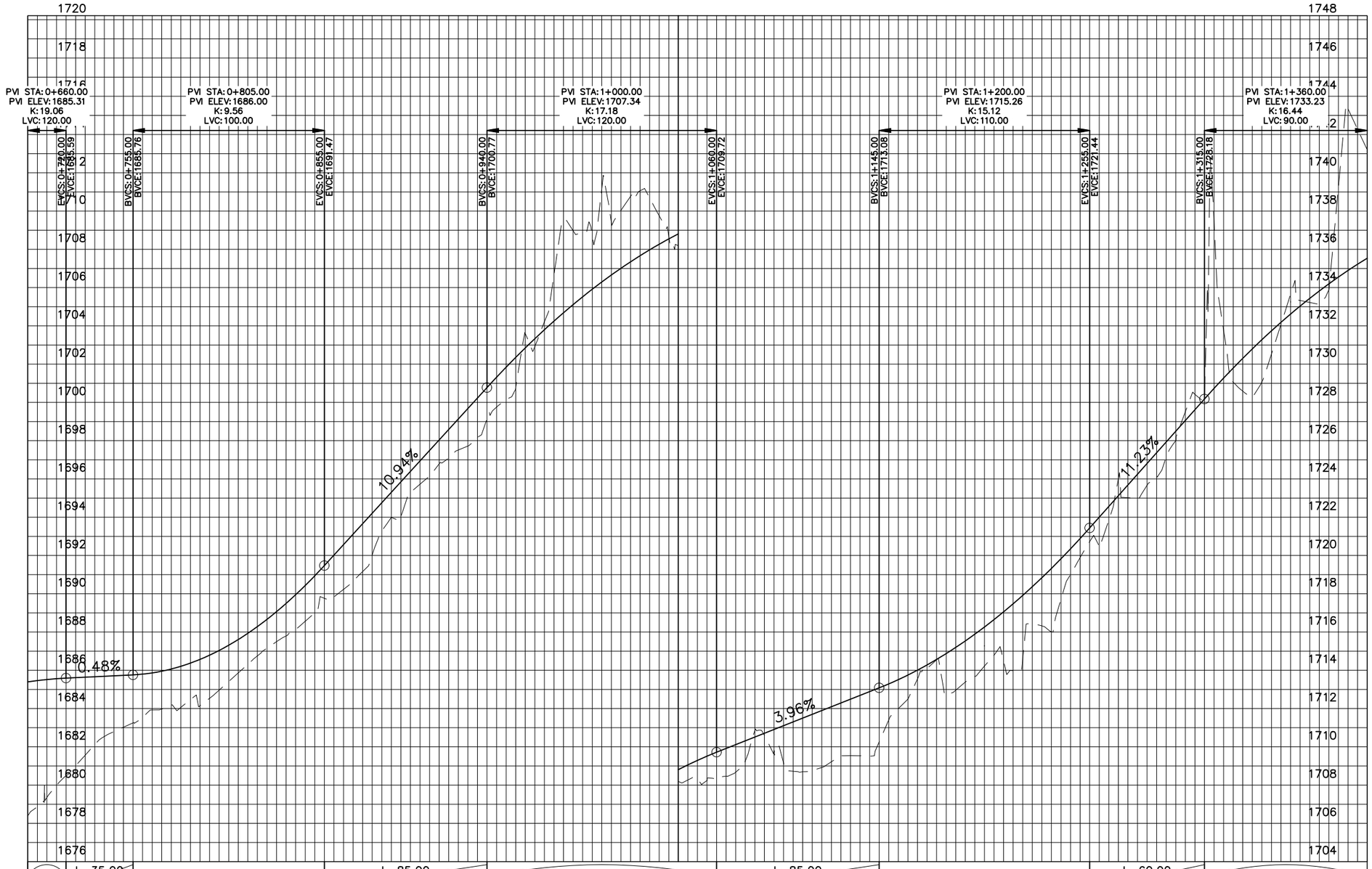

MANKIAL TO JABBAH ROAD SWAT-R1-Final.dwg

KHYBER PAKHTUNKHWA INTEGRATED TOURISM AND ENTERPRISE DEVELOPMENT PROJECT
COMMUNICATION & WORKS (C&W) DEPARTMENT, KPK

NATIONAL ENGINEERING SERVICES PAKISTAN (PVT.) LTD.

REV.	DATE	DESCRIPTION	APPROVED

DRAWN	JUNAID KHAN
SUBMITTED	NOSHERWAN NAEEM
RECOMMENDED	
CHD./VER.	
APPROVED	

REHABILITATION AND REMODELING OF MANKIAL BADA SARAI ROAD IN DISTRICT SWAT - 22 KM
LOT-01: KM 0+000 ~ 09+300

PROFILE
KM: 0+700 ~ KM: 1+400

DATE: January 2022
DWG NO.: 4169/(iii)/TD/P 002

MANKIAL TO JABBAH ROAD SWAT-R1-Final.dwg

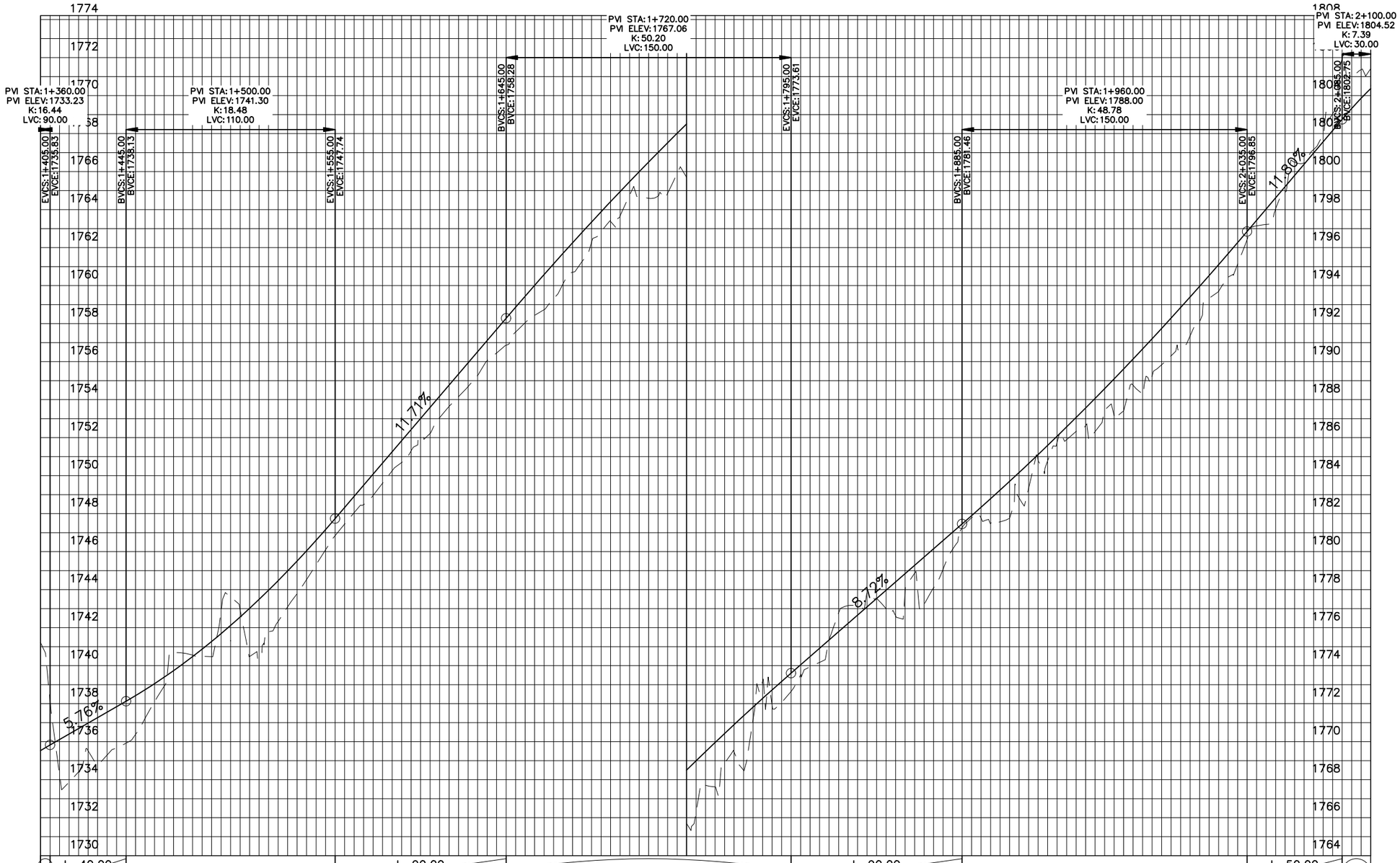

	1+400					1+500					1+600					1+700		
Design Levels	1735.530	1736.689	1737.841	1739.054	1740.477	1742.115	1743.971	1746.043	1748.324	1750.666	1753.009	1755.351	1757.694	1760.014	1762.256	1764.419	1766.503	1768.506
Ground Levels	1741.211	1734.410	1735.659	1738.106	1740.554	1743.616	1741.789	1744.534	1747.449	1749.604	1752.003	1754.161	1756.455	1758.433	1760.705	1763.375	1764.599	1765.694

			1+800					1+900					2+000					2+100
Design Levels	1770.431	1772.275	1774.042	1775.787	1777.532	1779.276	1781.021	1782.789	1784.636	1786.565	1788.577	1790.670	1792.845	1795.102	1797.439	1799.799	1802.159	1804.366
Ground Levels	1768.861	1773.170	1773.514	1776.765	1777.533	1778.861	1780.125	1781.485	1783.327	1785.891	1787.452	1788.290	1790.714	1793.696	1797.145	1800.494	1803.042	1805.411

KHYBER PAKHTUNKHWA
INTEGRATED TOURISM AND
ENTERPRISE DEVELOPMENT
PROJECT
COMMUNICATION & WORKS (C&W)
DEPARTMENT, KPK

NATIONAL ENGINEERING SERVICES
PAKISTAN (PVT.) LTD.

REV.	DATE	DESCRIPTION	APPROVED

DRAWN	JUNAID KHAN
SUBMITTED	NOSHERWAN NAEEM
RECOMMENDED	
CHD./VER.	
APPROVED	

REHABILITATION AND REMODELING OF MANKIAL BADA SARAI ROAD IN DISTRICT SWAT - 22 KM
LOT-01: KM 0+000 ~ 09+300

PROFILE
KM: 1+400 ~ KM: 2+100

DATE
January 2022

DWG NO.
4169/(iii)/TD/P 003

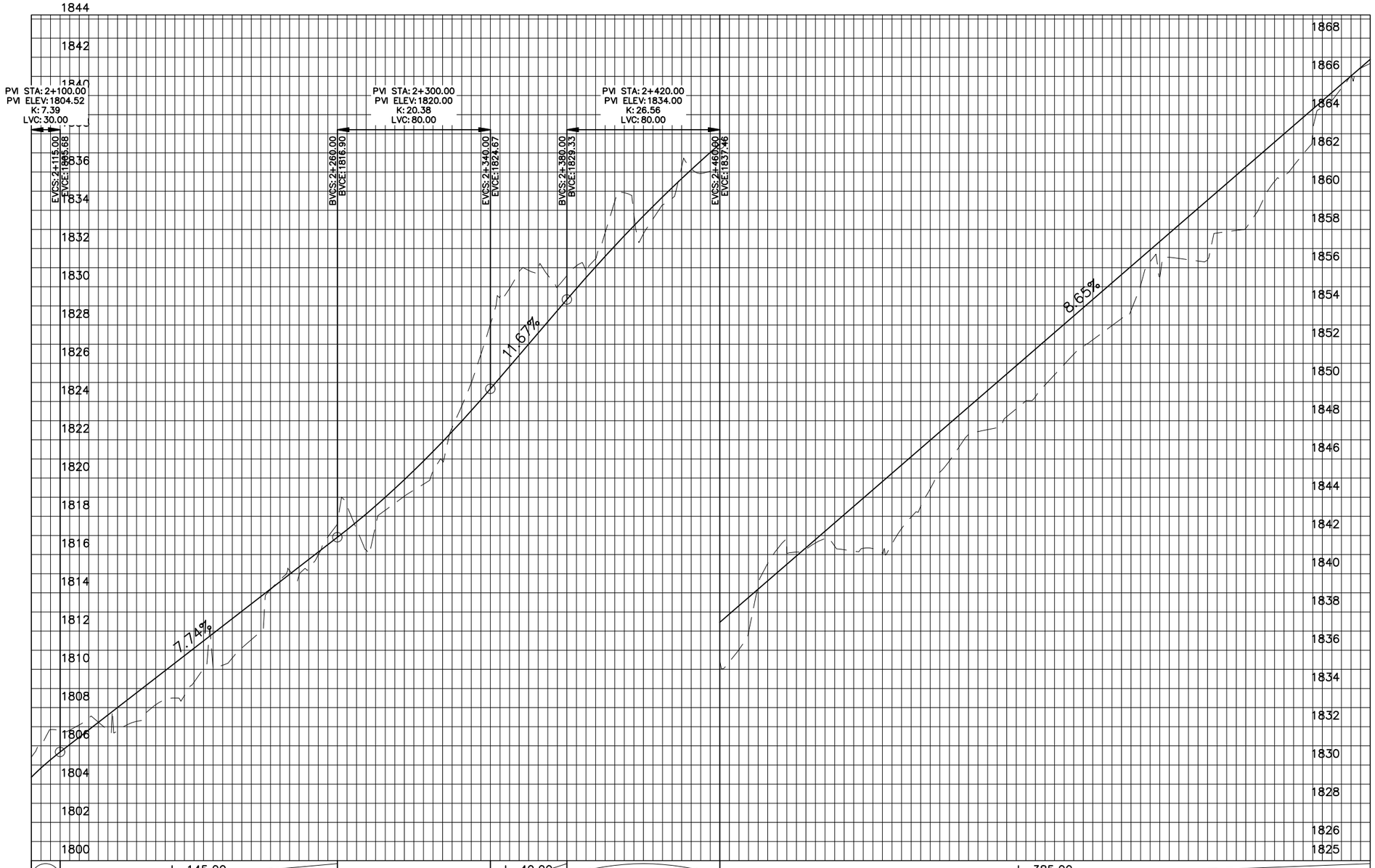

Vertical Geometry	30.00	L=145.00 G=7.74%	80.00	L=40.00 G=11.67%	80.00	L=385.00 G=8.65%

Design Levels	1804.366	1806.066	1807.615	1809.163	1810.711	1812.259	1813.807	1815.355	1816.904	1818.550	1820.393	1822.431	1824.667	1827.000	1829.333	1831.591	1833.699	1835.656	1837.462	1839.193	1840.923	1842.654	1844.385	1846.116	1847.847	1849.578	1851.309	1853.040	1854.770	1856.501	1858.232	1859.963	1861.694	1863.425	1865.156	1866.887
Ground Levels	1805.411	1806.821	1806.809	1807.738	1808.628	1810.215	1811.988	1814.948	1817.678	1817.512	1819.372	1822.639	1828.042	1830.854	1830.582	1832.819	1832.760	1836.263	1835.403	1839.338	1841.136	1841.448	1841.314	1842.958	1845.890	1847.533	1849.032	1850.941	1852.599	1855.064	1856.481	1857.812	1858.776	1861.323	1864.744	1866.675

2+100 2+200 2+300 2+400 2+500 2+600 2+700 2+800

MANKIAL TO JABBAH ROAD SWAT-R1-Final.dwg

KHYBER PAKHTUNKHWA INTEGRATED TOURISM AND ENTERPRISE DEVELOPMENT PROJECT
COMMUNICATION & WORKS (C&W) DEPARTMENT, KPK

NATIONAL ENGINEERING SERVICES PAKISTAN (PVT.) LTD.

REV.	DATE	DESCRIPTION	APPROVED

DRAWN	JUNAID KHAN
SUBMITTED	NOSHERWAN NAEEM
RECOMMENDED	
CHD./VER.	
APPROVED	

REHABILITATION AND REMODELING OF MANKIAL BADA SARAI ROAD IN DISTRICT SWAT - 22 KM
LOT-01: KM 0+000 ~ 09+300

PROFILE
KM: 2+100 ~ KM: 2+800

DATE	DWG NO.
January 2022	4169/(iii)/TD/P 004

MANKIAL TO JABBAH ROAD SWAT-R1-Final.dwg

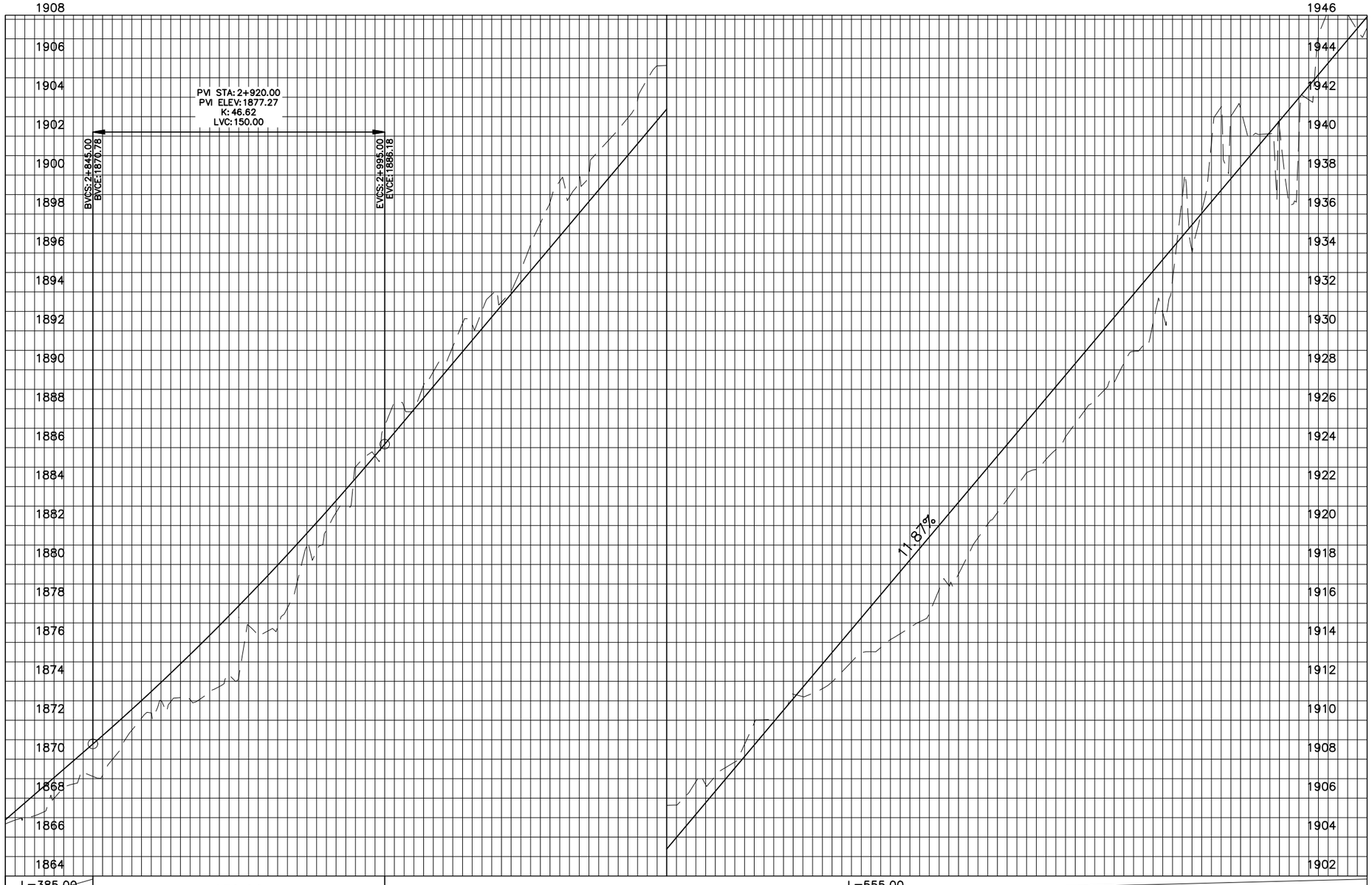

Design Levels	Ground Levels
1866.887	1866.675
1868.617	1867.307
1870.348	1869.318
1872.103	1870.755
1873.941	1872.994
1875.865	1873.081
1877.875	1874.242
1879.971	1876.795
1882.152	1880.692
1884.419	1885.012
1886.769	1888.345
1889.144	1889.903
1891.518	1892.321
1893.892	1894.042
1896.267	1898.602
1898.641	1899.893
1901.015	1902.936
1903.390	1905.631
1905.764	1906.689
1908.139	1908.762
1910.513	1910.515
1912.887	1911.620
1915.262	1913.476
1917.636	1914.441
1920.010	1916.703
1922.385	1919.365
1924.759	1922.030
1927.133	1923.893
1929.508	1926.448
1931.882	1928.949
1934.256	1932.626
1936.631	1939.652
1939.005	1939.931
1941.380	1936.443
1943.754	1946.404
1946.128	1945.562

KHYBER PAKHTUNKHWA
INTEGRATED TOURISM AND
ENTERPRISE DEVELOPMENT
PROJECT
COMMUNICATION & WORKS (C&W)
DEPARTMENT, KPK

NESPAK
NATIONAL ENGINEERING SERVICES
PAKISTAN (PVT.) LTD.

REV.	DATE	DESCRIPTION	APPROVED

DRAWN	JUNAID KHAN
SUBMITTED	NOSHERWAN NAEEM
RECOMMENDED	
CHD./VER.	
APPROVED	

REHABILITATION AND REMODELING OF MANKIAL BADA SARAI ROAD IN DISTRICT SWAT - 22 KM
LOT-01: KM 0+000 ~ 09+300

PROFILE
KM: 2+800 ~ KM: 3+500

DATE
January 2022

DWG NO.
4169/(iii)/TD/P 005

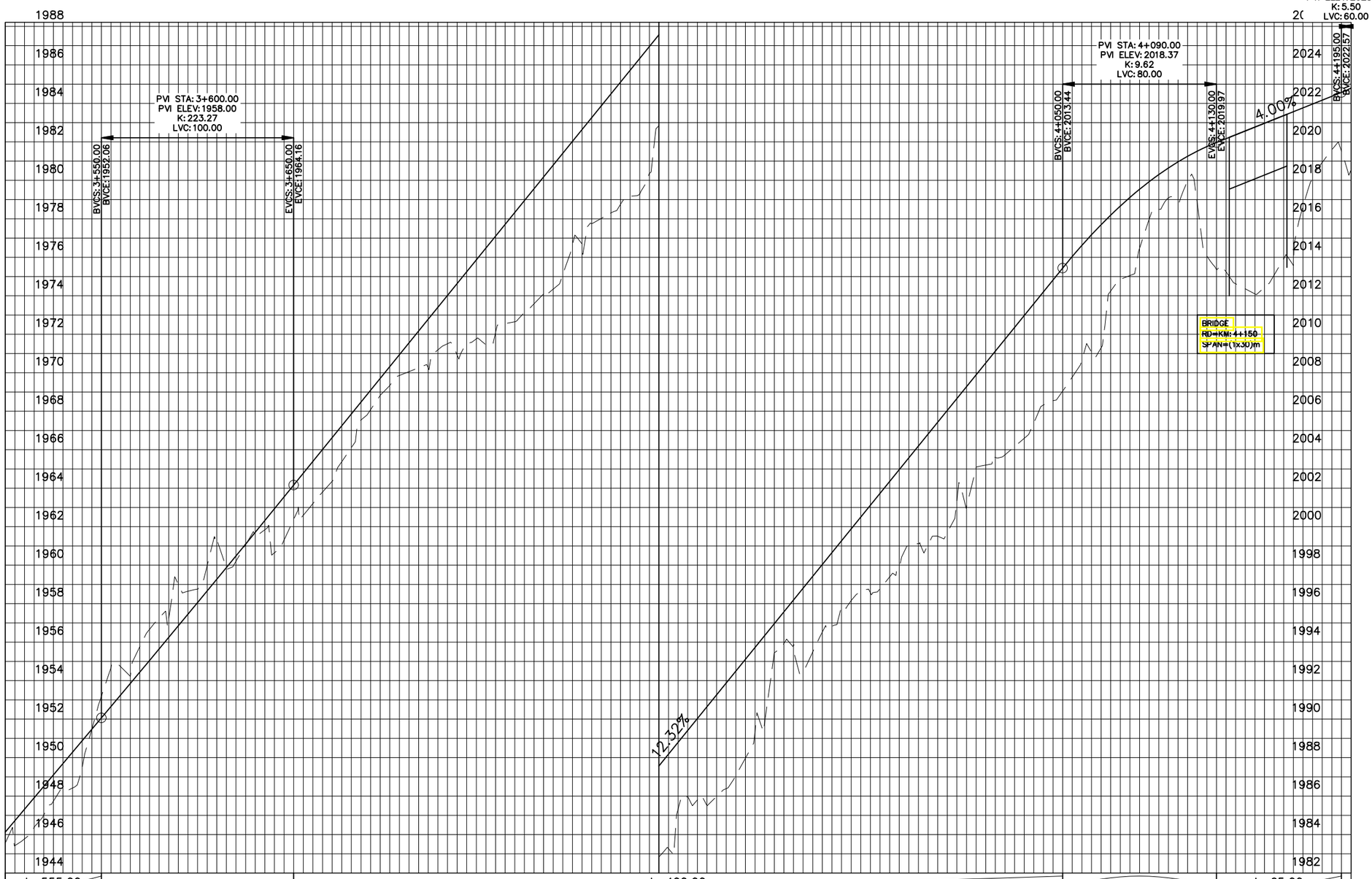

Vertical Geometry	L=555.00 G=11.87%	100.00	L=400.00 G=12.32%	80.00	L=65.00 G=4.00%	60.00

Design Levels	1946.128	1948.503	1950.877	1953.254	1955.646	1958.056	1960.484	1962.930	1965.392	1967.856	1970.320	1972.784	1975.248	1977.711	1980.175	1982.639	1985.103	1987.567	1990.031	1992.495	1994.959	1997.423	1999.887	2002.351	2004.815	2007.279	2009.743	2012.207	2014.618	2016.666	2018.299	2019.515	2020.367	2021.167	2021.967	2022.790
Ground Levels	1945.562	1947.013	1949.487	1954.720	1957.251	1958.753	1960.206	1960.642	1963.200	1966.107	1969.343	1970.244	1971.519	1972.554	1974.097	1976.665	1978.753	1982.840	1985.798	1987.072	1993.427	1993.491	1996.158	1997.391	1999.069	2001.024	2003.734	2006.327	2008.668	2012.858	2016.483	2016.809	2012.620	2013.083	2018.247	2018.513

3+500 3+600 3+700 3+800 3+900 4+000 4+100 4+200

MANKIAL TO JABBAH ROAD SWAT-R1-Final.dwg

KHYBER PAKHTUNKHWA INTEGRATED TOURISM AND ENTERPRISE DEVELOPMENT PROJECT
COMMUNICATION & WORKS (C&W) DEPARTMENT, KPK

NATIONAL ENGINEERING SERVICES PAKISTAN (PVT.) LTD.

REV.	DATE	DESCRIPTION	APPROVED

DRAWN	JUNAID KHAN
SUBMITTED	NOSHERWAN NAEEM
RECOMMENDED	
CHD./VER.	
APPROVED	

REHABILITATION AND REMODELING OF MANKIAL BADA SARAI ROAD IN DISTRICT SWAT - 22 KM
LOT-01: KM 0+000 ~ 09+300

PROFILE
KM: 3+500 ~ KM: 4+200

DATE: January 2022
DWG NO.: 4169/(iii)/TD/P 006

MANKIAL TO JABBAH ROAD SWAT-R1-Final.dwg

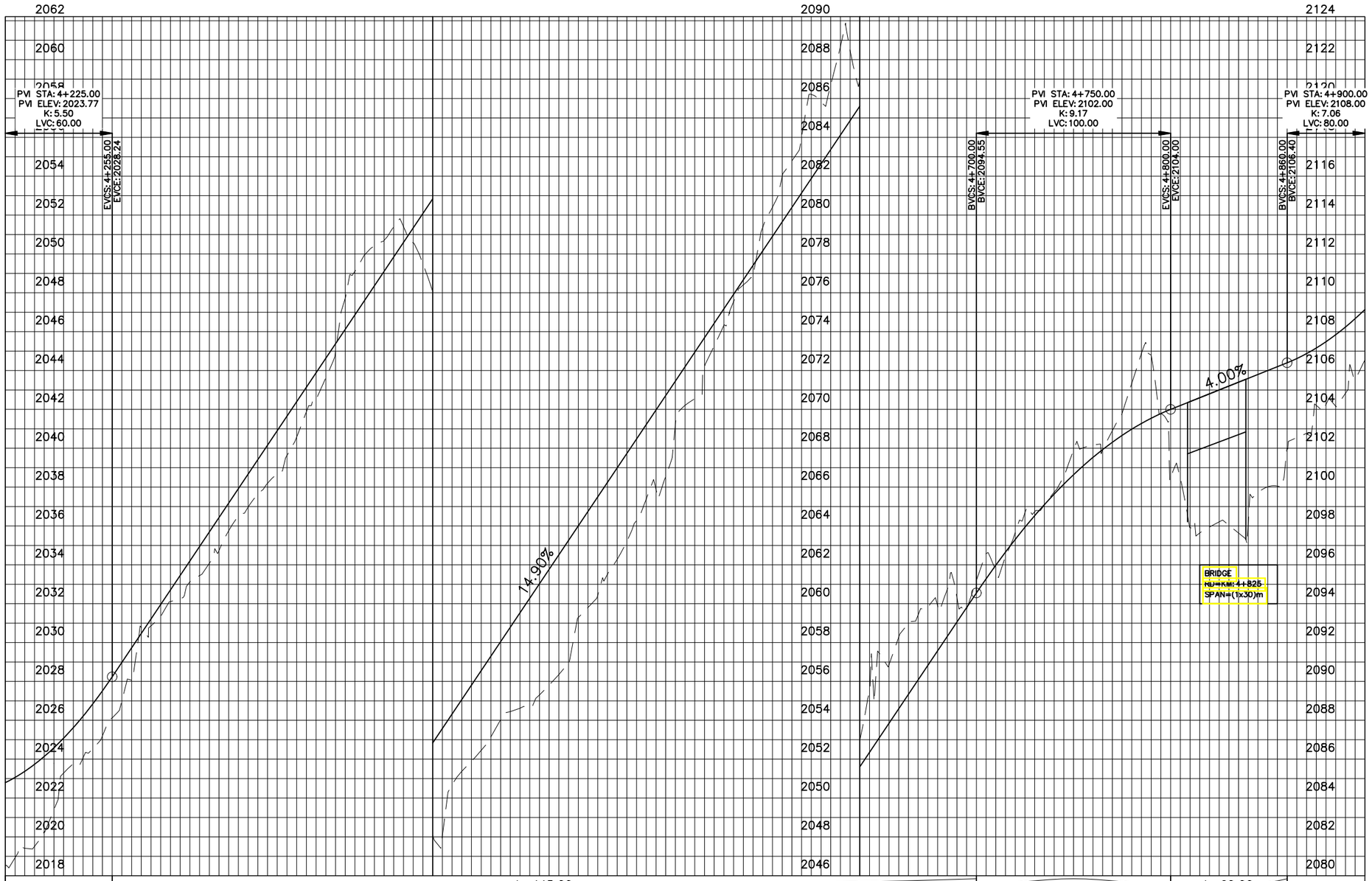

	Design Levels	Ground Levels
4+200	2022.790	2018.513
	2024.136	2020.265
	2026.208	2024.069
	2028.983	2027.002
	2031.964	2031.352
4+300	2034.944	2033.446
	2037.924	2036.497
	2040.905	2038.670
	2043.885	2042.552
	2046.865	2049.110
4+400	2049.845	2051.398
	2052.826	2048.084
	2055.806	2051.891
	2058.786	2054.446
	2061.766	2055.806
4+500	2064.747	2059.803
	2067.727	2063.210
	2070.707	2066.553
	2073.687	2072.172
	2076.668	2076.405
4+600	2079.648	2081.978
	2082.628	2085.845
	2085.609	2086.984
	2088.589	2092.272
	2091.569	2093.908
4+700	2094.549	2095.189
	2097.312	2097.664
	2099.638	2099.736
	2101.528	2102.159
	2102.982	2105.339
4+800	2104.000	2100.462
	2104.800	2097.948
	2105.600	2098.227
	2106.400	2101.999
	2107.483	2104.257
4+900	2109.133	2106.542

KHYBER PAKHTUNKHWA
INTEGRATED TOURISM AND
ENTERPRISE DEVELOPMENT
PROJECT
COMMUNICATION & WORKS (C&W)
DEPARTMENT, KPK

NESPAK
NATIONAL ENGINEERING SERVICES
PAKISTAN (PVT.) LTD.

REV.	DATE	DESCRIPTION	APPROVED

DRAWN JUNAID KHAN
SUBMITTED NOSHERWAN NAEEM
RECOMMENDED
CHD./VER.
APPROVED

REHABILITATION AND REMODELING OF MANKIAL BADA SARAI ROAD IN DISTRICT SWAT - 22 KM
LOT-01: KM 0+000 ~ 09+300

PROFILE
KM: 4+200 ~ KM: 4+900

DATE January 2022
DWG NO. 4169/(iii)/TD/P 007

MANKIAL TO JABBAH ROAD SWAT-R1-Final.dwg

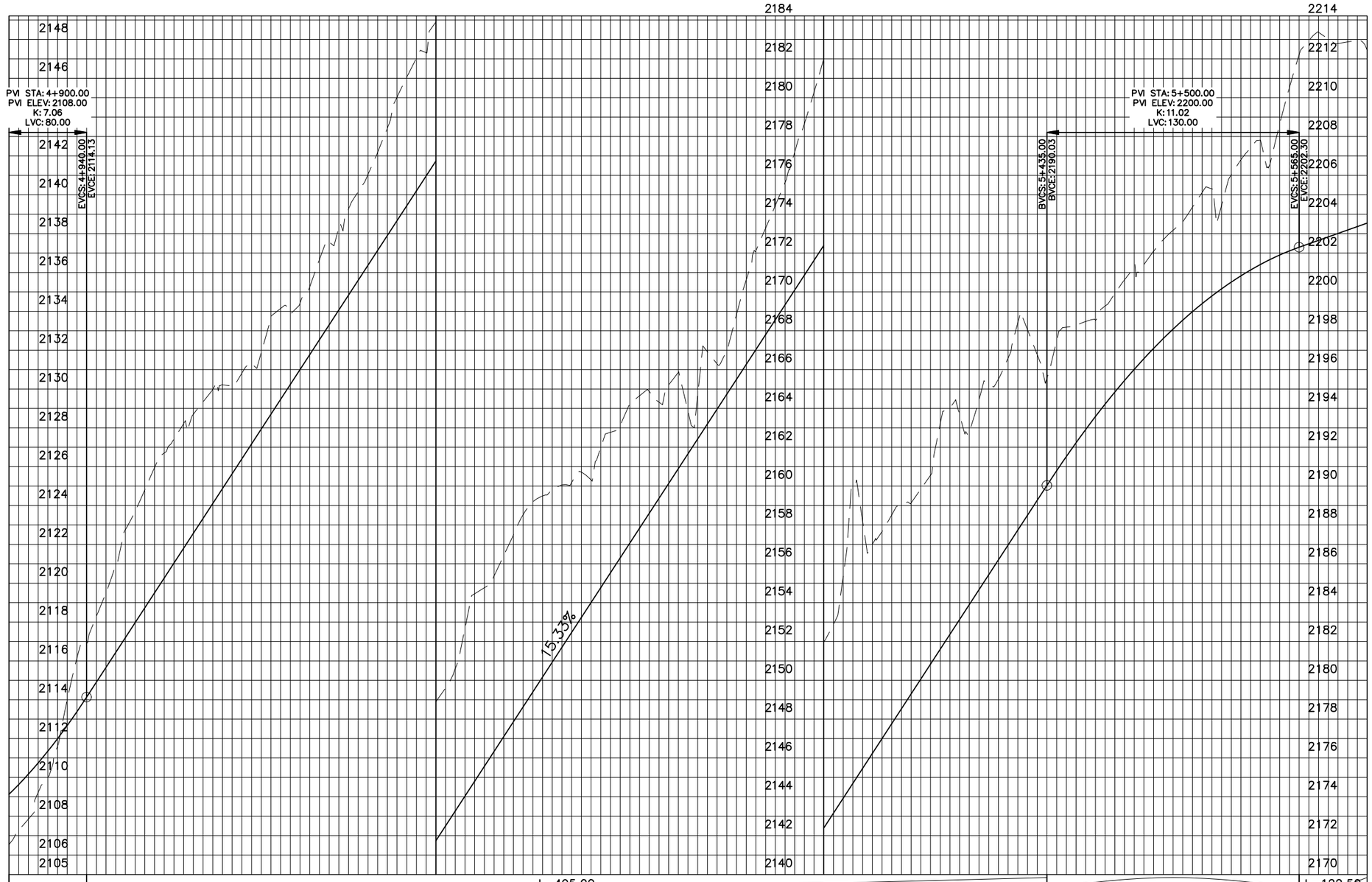

	Design Levels	Ground Levels
4+900	2109.133	2106.542
	2111.350	2110.010
	2114.133	2116.921
	2117.200	2122.760
	2120.267	2126.704
5+000	2123.333	2129.335
	2126.400	2130.812
	2129.467	2134.148
	2132.533	2136.662
	2135.600	2140.160
5+100	2138.667	2145.028
	2141.733	2148.895
	2144.800	2154.457
	2147.867	2157.491
	2150.933	2159.797
5+200	2154.000	2160.317
	2157.067	2164.247
	2160.133	2165.210
	2163.200	2166.916
	2166.267	2170.612
5+300	2169.333	2175.624
	2172.400	2181.965
	2175.467	2188.193
	2178.533	2189.053
	2181.600	2193.212
5+400	2184.667	2194.450
	2187.733	2198.418
	2190.789	2197.493
	2193.583	2198.547
	2196.015	2201.350
5+500	2198.083	2203.170
	2199.789	2205.301
	2201.132	2207.409
	2202.112	2210.530
	2202.831	2213.024
5+600	2203.539	2212.445

KHYBER PAKHTUNKHWA
INTEGRATED TOURISM AND
ENTERPRISE DEVELOPMENT
PROJECT
COMMUNICATION & WORKS (C&W)
DEPARTMENT, KPK

NATIONAL ENGINEERING SERVICES
PAKISTAN (PVT.) LTD.

REV.	DATE	DESCRIPTION	APPROVED

DRAWN	JUNAID KHAN
SUBMITTED	NOSHERWAN NAEEM
RECOMMENDED	
CHD./VER.	
APPROVED	

REHABILITATION AND REMODELING OF MANKIAL BADA SARAI ROAD IN DISTRICT SWAT - 22 KM
LOT-01: KM 0+000 ~ 09+300

PROFILE
KM: 4+900 ~ KM: 5+600

DATE
January 2022

DWG NO.
4169/(iii)/TD/P 008

MANKIAL TO JABBAH ROAD SWAT-R1-Final.dwg

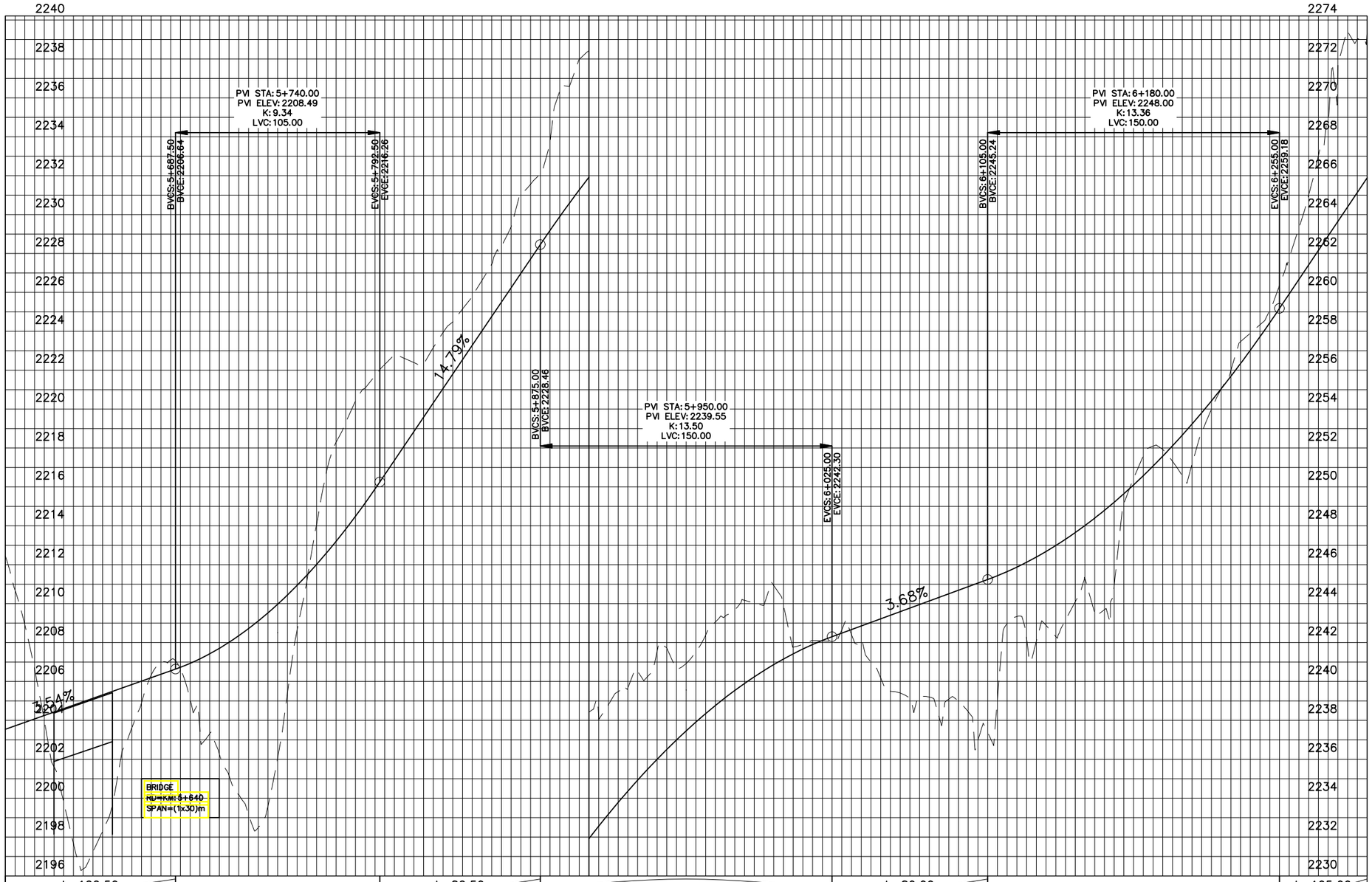

Design Levels	Ground Levels
2203.539	2212.445
2204.247	2204.001
2204.955	2196.357
2205.662	2202.422
2206.370	2206.985
2207.162	2203.547
2208.351	2200.178
2209.970	2202.075
2212.017	2214.077
2214.492	2220.422
2217.365	2222.794
2220.323	2223.163
2223.280	2225.806
2226.237	2229.375
2229.185	2233.743
2231.921	2238.423
2234.359	2239.666
2236.502	2241.731
2238.348	2242.384
2239.898	2244.171
2241.152	2243.917
2242.109	2242.081
2242.854	2241.885
2243.589	2239.406
2244.324	2238.182
2245.059	2236.972
2245.879	2243.337
2246.988	2242.315
2248.397	2243.521
2250.105	2250.440
2252.112	2251.313
2254.419	2253.989
2257.025	2257.905
2259.922	2261.777
2262.902	2269.017
2265.882	2273.291

KHYBER PAKHTUNKHWA
INTEGRATED TOURISM AND
ENTERPRISE DEVELOPMENT
PROJECT
COMMUNICATION & WORKS (C&W)
DEPARTMENT, KPK

NESPAK
NATIONAL ENGINEERING SERVICES
PAKISTAN (PVT.) LTD.

REV.	DATE	DESCRIPTION	APPROVED

DRAWN	JUNAID KHAN
SUBMITTED	NOSHERWAN NAEEM
RECOMMENDED	
CHD./VER.	
APPROVED	

REHABILITATION AND REMODELING OF MANKIAL BADA SARAI ROAD IN DISTRICT SWAT - 22 KM
LOT-01: KM 0+000 ~ 09+300

PROFILE
KM: 5+600 ~ KM: 6+300

DATE
January 2022

DWG NO.
4169/(iii)/TD/P 009

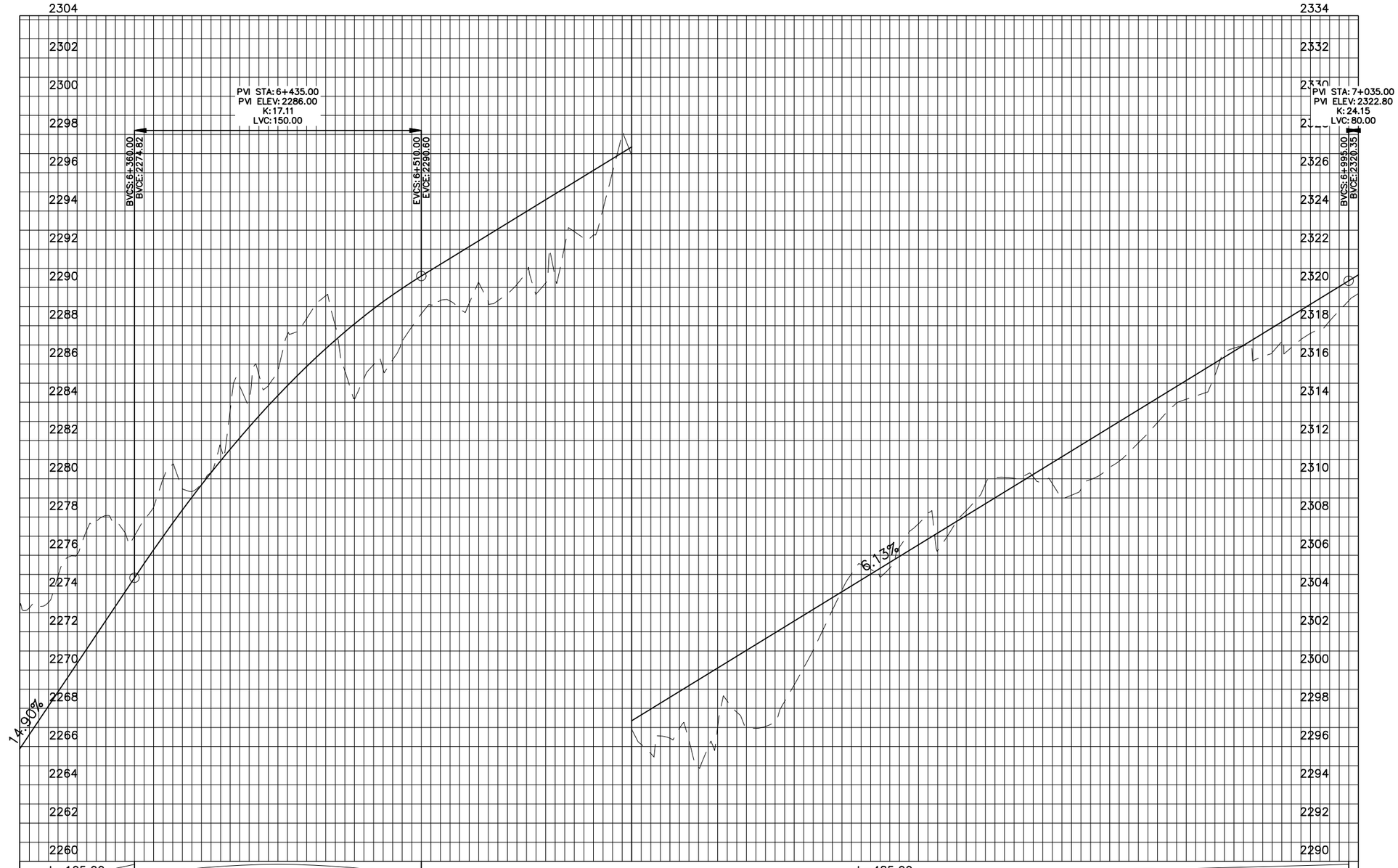

Vertical Geometry	L=105.00 G=14.90%	150.00	L=485.00 G=6.13%	80.00

	6+300					6+400					6+500					6+600					6+700					6+800					6+900					7+000
Design Levels	2265.882	2268.863	2271.843	2274.824	2277.687	2280.317	2282.712	2284.874	2286.803	2288.497	2289.958	2291.213	2292.440	2293.667	2294.894	2296.120	2297.347	2298.574	2299.800	2301.027	2302.254	2303.480	2304.707	2305.934	2307.160	2308.387	2309.614	2310.841	2312.067	2313.294	2314.521	2315.747	2316.974	2318.201	2319.427	2320.659
Ground Levels	2273.291	2274.911	2277.764	2277.020	2280.752	2280.348	2284.272	2287.544	2289.566	2285.256	2287.346	2289.320	2290.258	2290.162	2290.575	2292.743	2296.916	2296.435	2295.957	2297.031	2298.365	2302.095	2305.522	2306.423	2306.248	2308.880	2310.023	2309.739	2309.957	2311.379	2313.504	2314.497	2316.956	2317.181	2317.833	2319.680

KHYBER PAKHTUNKHWA
INTEGRATED TOURISM AND
ENTERPRISE DEVELOPMENT
PROJECT
COMMUNICATION & WORKS (C&W)
DEPARTMENT, KPK

NATIONAL ENGINEERING SERVICES
PAKISTAN (PVT.) LTD.

REV.	DATE	DESCRIPTION	APPROVED

DRAWN	JUNAID KHAN
SUBMITTED	NOSHERWAN NAEEM
RECOMMENDED	
CHD./VER.	
APPROVED	

REHABILITATION AND REMODELING OF MANKIAL BADA
SARAI ROAD IN DISTRICT SWAT - 22 KM
LOT-01: KM 0+000 ~ 09+300

PROFILE
KM: 6+300 ~ KM: 7+000

DATE
January 2022

DWG NO.
4169/(iii)/TD/P 010

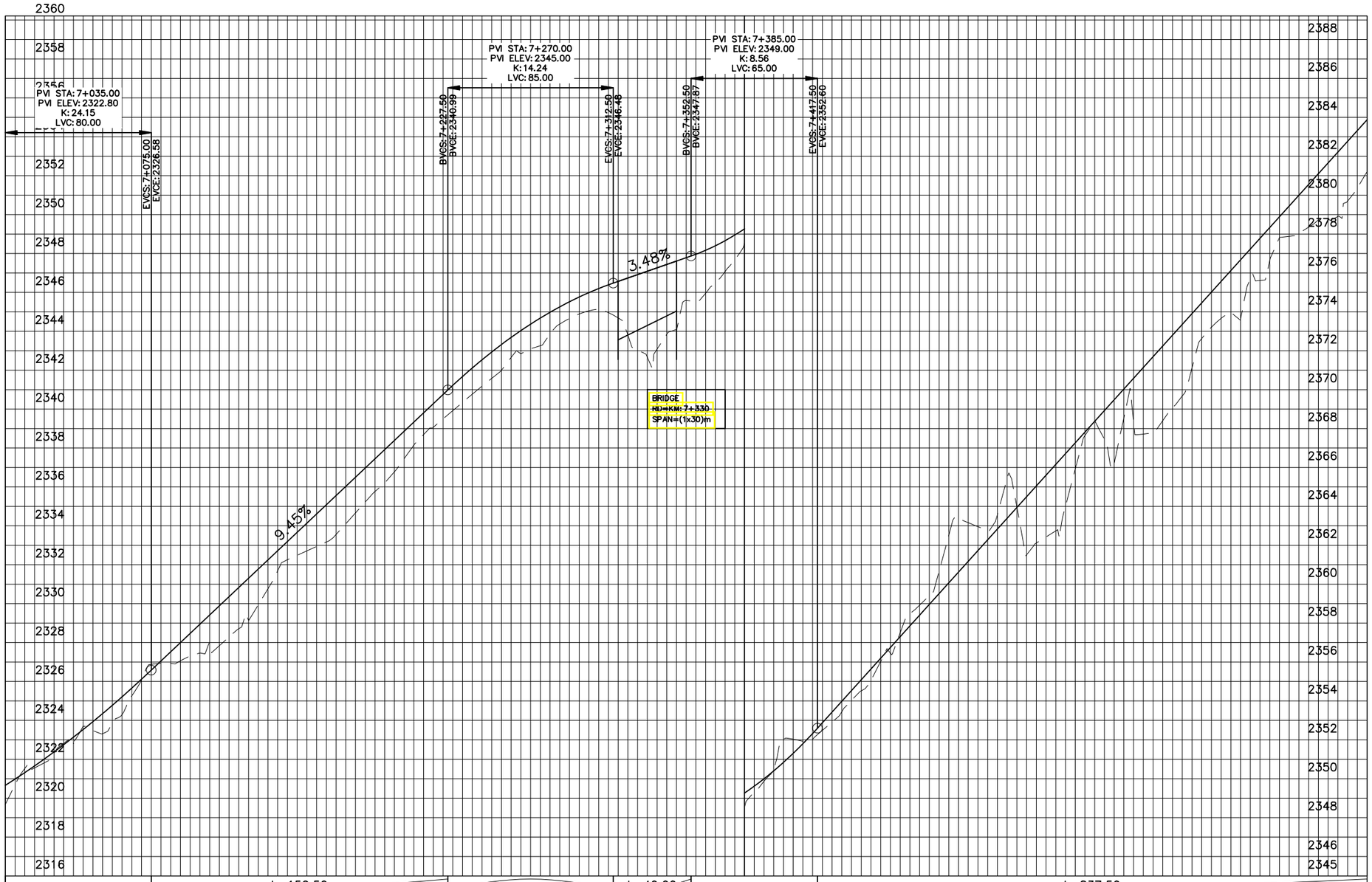

Vertical Geometry	80.00	L=152.50 G=9.45%	85.00	L=40.00 G=3.48%	65.00	L=837.50 G=11.07%

Design Levels	Ground Levels
2320.659	2319.680
2322.010	2321.815
2323.527	2323.702
2325.209	2324.304
2327.052	2326.937
2328.941	2327.455
2330.830	2328.714
2332.720	2331.689
2334.609	2332.938
2336.498	2334.666
2338.387	2336.779
2340.277	2339.064
2342.111	2340.764
2343.685	2342.653
2344.977	2343.859
2345.989	2345.051
2346.739	2343.808
2347.435	2343.844
2348.163	2345.957
2349.268	2348.546
2350.839	2352.036
2352.874	2352.483
2355.088	2354.519
2357.302	2357.501
2359.516	2360.670
2361.730	2362.956
2363.944	2363.969
2366.158	2362.741
2368.372	2368.406
2370.586	2368.333
2372.800	2369.068
2375.013	2373.209
2377.227	2375.700
2379.441	2377.882
2381.655	2378.762
2383.869	2381.205

7+000 7+100 7+200 7+300 7+400 7+500 7+600 7+700

MANKIAL TO JABBAH ROAD SWAT-R1-Final.dwg

KHYBER PAKHTUNKHWA INTEGRATED TOURISM AND ENTERPRISE DEVELOPMENT PROJECT
COMMUNICATION & WORKS (C&W) DEPARTMENT, KPK

NATIONAL ENGINEERING SERVICES PAKISTAN (PVT.) LTD.

REV.	DATE	DESCRIPTION	APPROVED

DRAWN	JUNAID KHAN
SUBMITTED	NOSHERWAN NAEEM
RECOMMENDED	
CHD./VER.	
APPROVED	

REHABILITATION AND REMODELING OF MANKIAL BADA SARAI ROAD IN DISTRICT SWAT - 22 KM
LOT-01: KM 0+000 ~ 09+300

PROFILE
KM: 7+000 ~ KM: 7+700

DATE: January 2022

DWG NO.: 4169/(iii)/TD/P 011

MANKIAL TO JABBAH ROAD SWAT-R1-Final.dwg

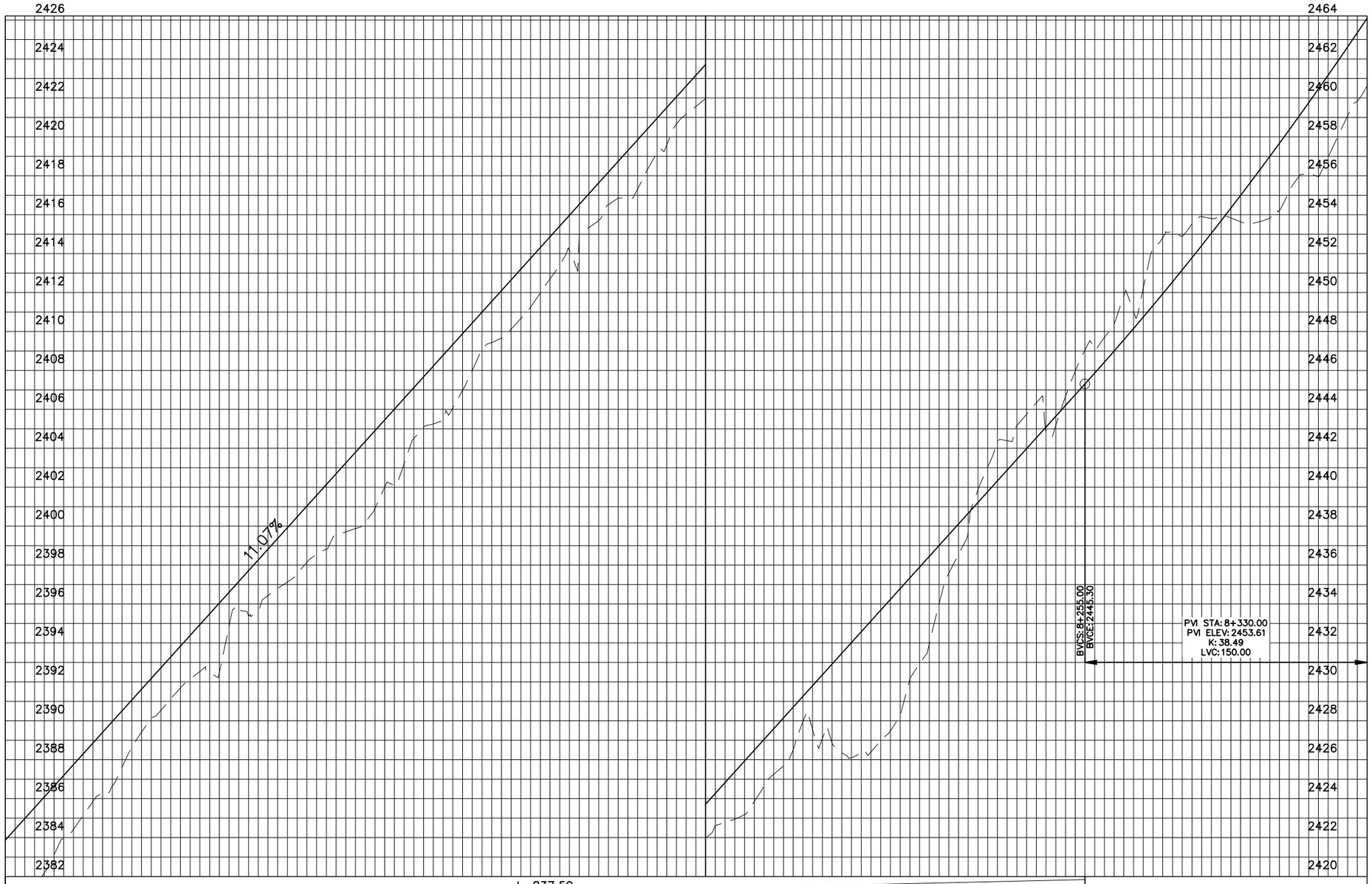

Design Levels	Ground Levels
2383.869	2381.205
2386.083	2382.181
2388.297	2385.137
2390.511	2387.618
2392.725	2390.542
2394.939	2392.539
2397.152	2395.674
2399.366	2396.806
2401.580	2398.545
2403.794	2399.874
2406.008	2402.111
2408.222	2405.252
2410.436	2407.991
2412.650	2410.117
2414.864	2412.705
2417.078	2415.343
2419.292	2416.848
2421.505	2419.588
2423.719	2421.975
2425.933	2423.182
2428.147	2425.674
2430.361	2427.082
2432.575	2426.372
2434.789	2428.258
2437.003	2434.015
2439.217	2439.868
2441.431	2443.169
2443.645	2443.169
2445.862	2447.172
2448.154	2449.019
2450.549	2453.137
2453.049	2453.810
2455.653	2453.521
2458.360	2455.182
2461.171	2456.957
2464.087	2460.616

7+700 7+800 7+900 8+000 8+100 8+200 8+300 8+400

KHYBER PAKHTUNKHWA
INTEGRATED TOURISM AND
ENTERPRISE DEVELOPMENT
PROJECT
COMMUNICATION & WORKS (C&W)
DEPARTMENT, KPK

NESPAK
NATIONAL ENGINEERING SERVICES
PAKISTAN (PVT.) LTD.

REV.	DATE	DESCRIPTION	APPROVED

DRAWN: JUNAID KHAN
SUBMITTED: NOSHERWAN NAEEM
RECOMMENDED:
CHD./VER.:
APPROVED:

REHABILITATION AND REMODELING OF MANKIAL BADA SARAI ROAD IN DISTRICT SWAT - 22 KM
LOT-01: KM 0+000 ~ 09+300

PROFILE
KM: 7+700 ~ KM: 8+400

DATE

DWG NO.
4169/(iii)/TD/P 012

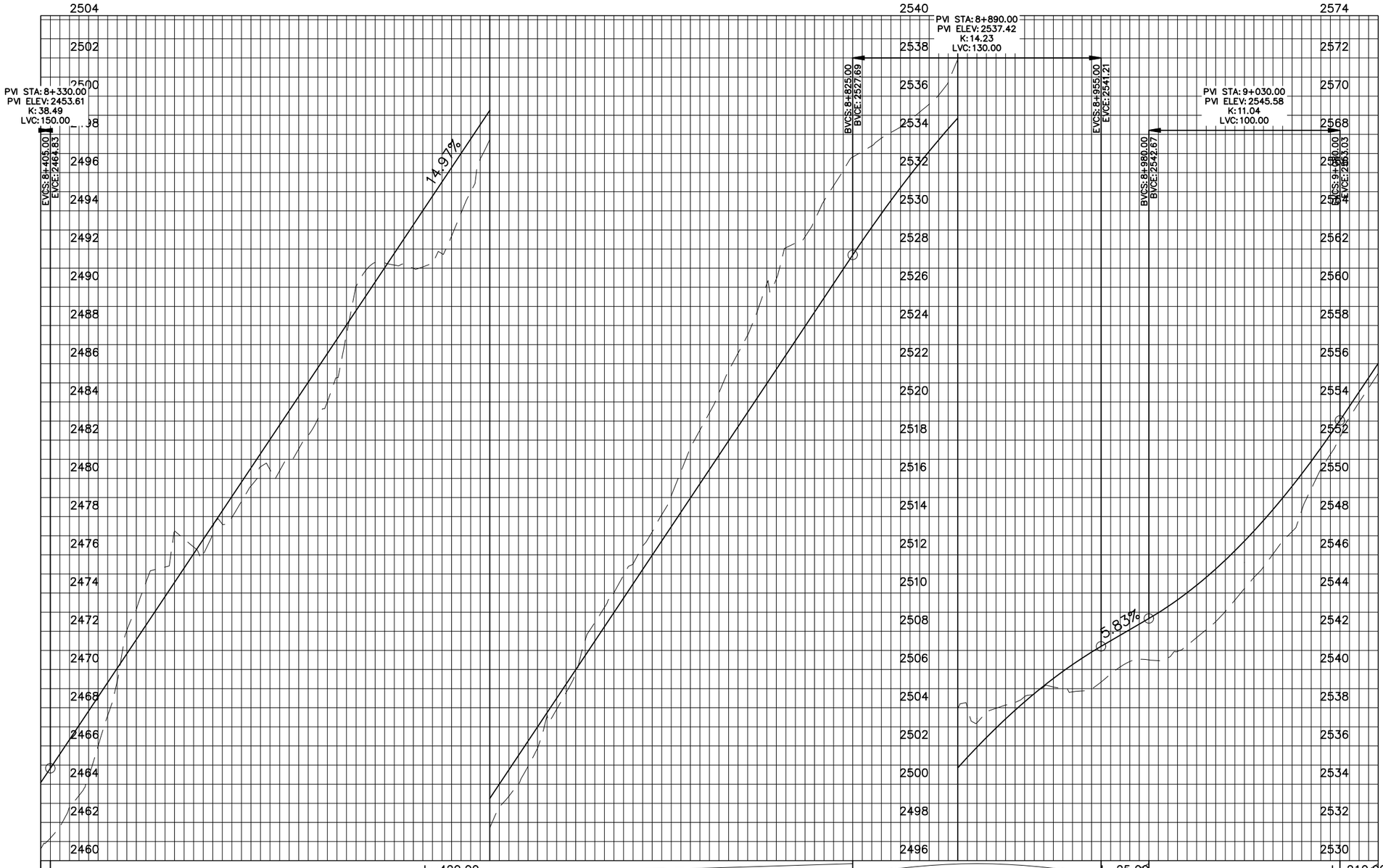

Vertical Geometry: 150.00 | L=420.00 G=14.97% | 130.00 | L=25.00 G=5.83% | 100.00 | L=210.00 G=14.89%

Design Levels	Ground Levels
2464.087	2460.616
2467.077	2463.404
2470.070	2469.391
2473.063	2475.236
2476.057	2476.408
2479.050	2477.948
2482.043	2480.451
2485.036	2482.258
2488.030	2487.522
2491.023	2491.280
2494.016	2491.065
2497.009	2493.887
2500.003	2498.817
2502.996	2501.880
2505.989	2505.808
2508.982	2510.024
2511.976	2513.193
2514.969	2517.601
2517.962	2521.622
2520.955	2526.170
2523.949	2528.638
2526.942	2532.107
2529.856	2533.801
2532.498	2535.163
2534.859	2537.939
2536.939	2537.972
2538.738	2538.735
2540.256	2538.833
2541.501	2539.764
2542.668	2540.502
2544.015	2541.262
2545.726	2543.038
2547.798	2545.368
2550.234	2548.325
2553.031	2552.147
2556.010	2555.500

8+400 8+500 8+600 8+700 8+800 8+900 9+000 9+100

MANKIAL TO JABBAH ROAD SWAT-R1-Final.dwg

KHYBER PAKHTUNKHWA INTEGRATED TOURISM AND ENTERPRISE DEVELOPMENT PROJECT
COMMUNICATION & WORKS (C&W) DEPARTMENT, KPK

NATIONAL ENGINEERING SERVICES PAKISTAN (PVT.) LTD.

REV.	DATE	DESCRIPTION	APPROVED

DRAWN	JUNAID KHAN
SUBMITTED	NOSHERWAN NAEEM
RECOMMENDED	
CHD./VER.	
APPROVED	

REHABILITATION AND REMODELING OF MANKIAL BADA SARAI ROAD IN DISTRICT SWAT - 22 KM
LOT-01: KM 0+000 ~ 09+300

PROFILE
KM: 8+400 ~ KM: 9+100

DATE: January 2022
DWG NO.: 4169/(iii)/TD/P 013

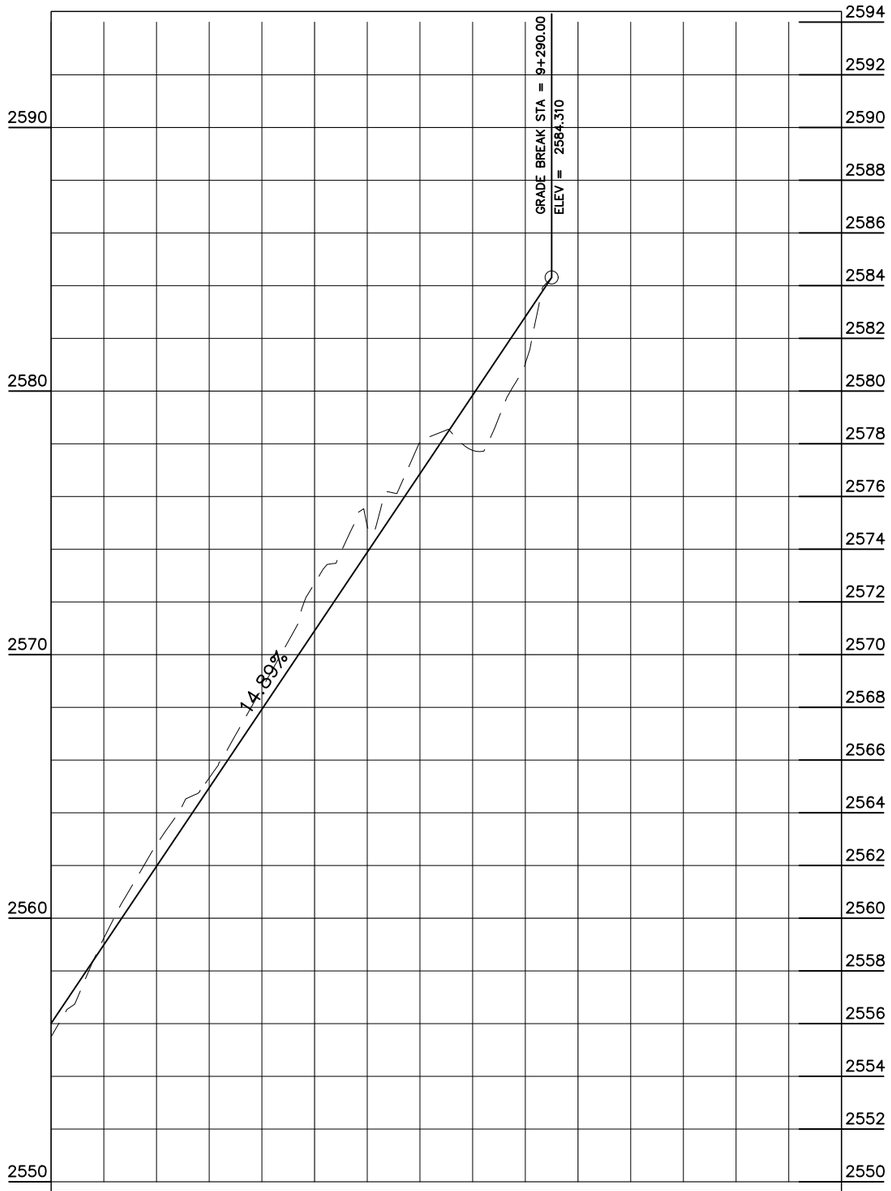

Vertical Geometry: L=210.00, G=14.89%

Design Levels	2556.010	2558.989	2561.968	2564.946	2567.925	2570.904	2573.883	2576.862	2579.841	2582.819
Ground Levels	2555.500	2559.238	2562.790	2565.320	2568.720	2572.700	2574.862	2578.092	2577.750	2581.043

9+100 9+200 9+300 9+400

MANKIAL TO JABBAH ROAD SWAT-R1-Final.dwg

KHYBER PAKHTUNKHWA INTEGRATED TOURISM AND ENTERPRISE DEVELOPMENT PROJECT
COMMUNICATION & WORKS (C&W) DEPARTMENT, KPK

NATIONAL ENGINEERING SERVICES PAKISTAN (PVT.) LTD.

REV.	DATE	DESCRIPTION	APPROVED

DRAWN	JUNAID KHAN
SUBMITTED	NOSHERWAN NAEEM
RECOMMENDED	
CHD./VER.	
APPROVED	

REHABILITATION AND REMODELING OF MANKIAL BADA SARAI ROAD IN DISTRICT SWAT - 22 KM
LOT-01: KM 0+000 ~ 09+300

PROFILE
KM: 9+100 ~ End

DATE: January 2022
DWG NO.: 4169/(iii)/TD/P 014

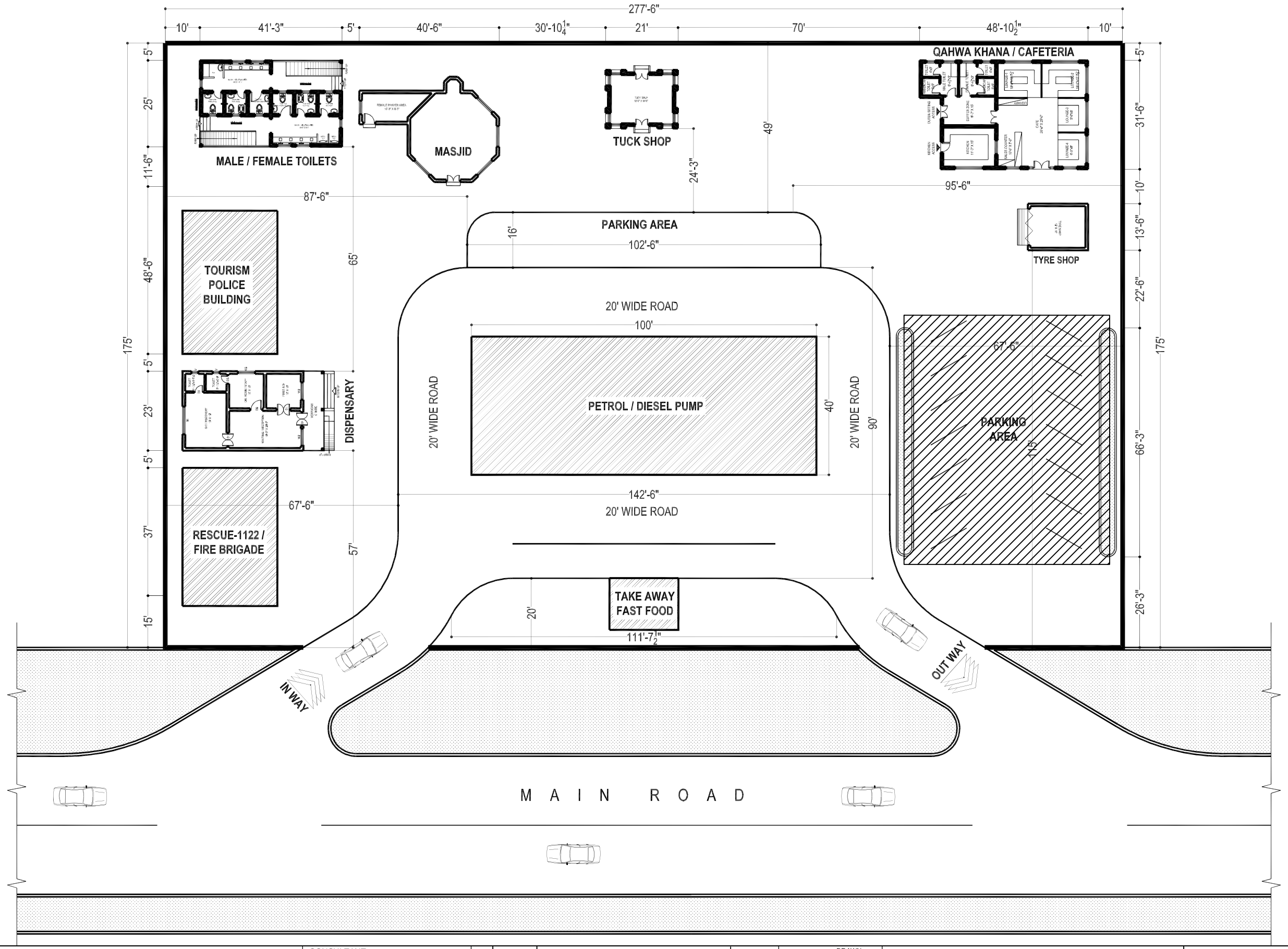

CLIENT:	CONSULTANT:					DRAWN	PROJECT:	TITLE:
KHYBER PAKHTUNKHWA INTEGRATED TOURISM AND ENTERPRISE DEVELOPMENT PROJECT **PMU (KITE) C&W DEPARTMENT KP**	NATIONAL ENGINEERING SERVICES PAKISTAN (PVT.) LTD.				SUBMITTED		**REHABILITATION AND REMODELING OF MANKIAL BADA SARAI ROAD IN DISTRICT SWAT - 22 KM** **LOT-01: KM 0+000 ~ 09+300**	**DESIGN OF REST AREA** LAYOUT PLAN
					RECOMMNED			
					CHD./VER			DATE: JANUARY 2022 / DWG. NO 38164/102/TD/ RA/LOT-01/01
		REV	DATE	DESCRIPTION	APPROVED			

FRONT ELEVATION

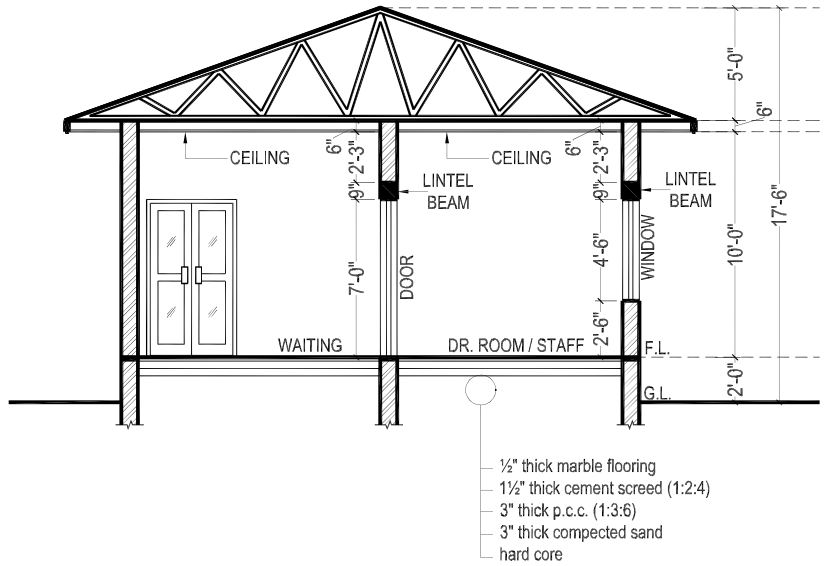

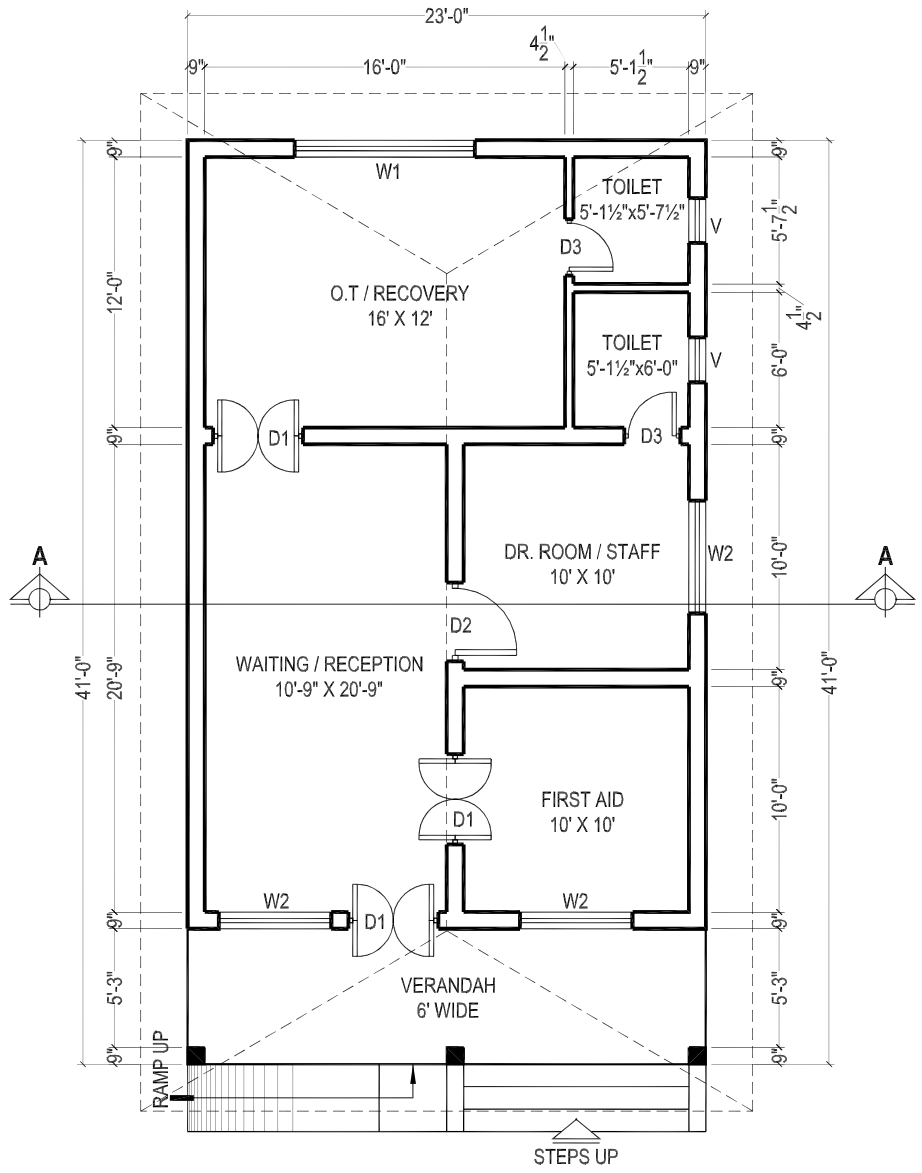

DISPENSARY BLOCK

COVERED AREA = 943.00 SFT

SCHEDULE OF OPENING

S,NO.	TYPE	SIZE	S/LEVEL
01	D1	4'-0" X 7'-0"	±0'-0"
02	D2	3'-6" X 7'-0"	±0'-0"
03	D3	2'-6" X 7'-0"	±0'-0"
04	W1	8'-0" X 4'-6"	+2'-6"
05	W2	5'-0" X 4'-6"	+2'-6"
06	V	2'-0" X 2'-0"	+5'-0"

BUILDING SPECIFICATION

* PCC (1:4:8) IN FOUNDATIONS.
* 2" THICK DPC (DAMP PROOF COURSE) IN (1:2:4) PCC WITH 2 COATS OF HOT BITUMEN WITH POLYTHENE SHEET.
* BURNT BRICK MASONRY IN 1:6 CEMENT SAND RATIO MORTAR.
* 1/2" THICK PLASTER ON WALLS IN 1:6 CEMENT SAND RATIO.
* ALL LINTELS & BEAMS IN (1:2:4) CEMENT: SAND: AGGREGATE RATIO WITH 14 DAYS CURING.
* ALL ELECTRICAL WIRING TO BE CONCEALED.
* ALL LOAD BEARING WALLS SHALL BE MINIMUM 9" THICK.
* ALL PARTITION WALLS SHALL BE 9" THICK.
* THEN 1 1/2" BRICK TILES SET IN 1:3 CEMENT SAND RATIO.
* ALL INTER FLOOR SLABS SHALL BE COVERED WITH 2" OF PCC (1:4:8) IN SLOPE THEN 24" X 24" IMPORTED CERAMIC TILES AS APPROVED BY THE ENGINEER.
* ALL GROUND FLOORS SHALL BE LAID ON COMPACTED EARTH THEN 6" OF WATERED AND RAMMED SAND THEN 4" OF (1:4:8) IN SLOPE THEN 2" (1:2:4) THEN 24" X 24" IMPORTED CERAMIC TILES AS APPROVED BY THE ENGINEER.

CLIENT:	CONSULTANT:	REV	DATE	DESCRIPTION		DRAWN	PROJECT:	TITLE:	
KHYBER PAKHTUNKHWA INTEGRATED TOURISM AND ENTERPRISE DEVELOPMENT PROJECT PMU (KITE) C&W DEPARTMENT KP	NATIONAL ENGINEERING SERVICES PAKISTAN (PVT.) LTD.				SUBMITTED RECOMMNED CHD./VER APPROVED		REHABILITATION AND REMODELING OF MANKIAL BADA SARAI ROAD IN DISTRICT SWAT - 22 KM LOT-01: KM 0+000 ~ 09+300	REST AREA DISPENSARY BLOCK	
								DATE: JANUARY 2022	DWG. NO 38164/102/TD/ RA/LOT-01/02

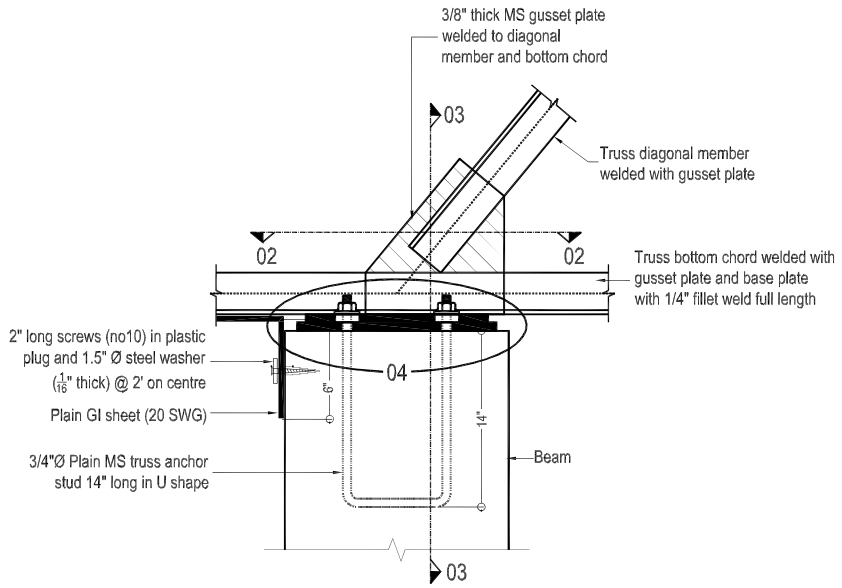

BASE PLATE DETAIL

(All trusses)

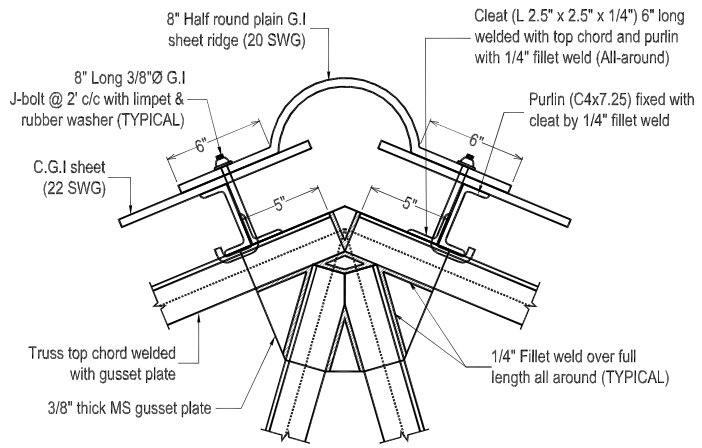

TYPICAL TOP CHORD CONNECTION DETAIL

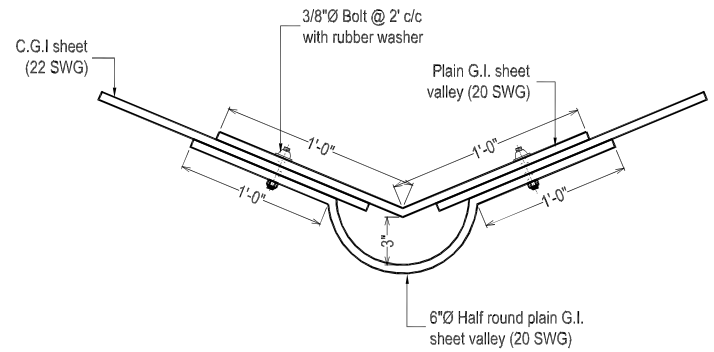

VALLEY DETAIL

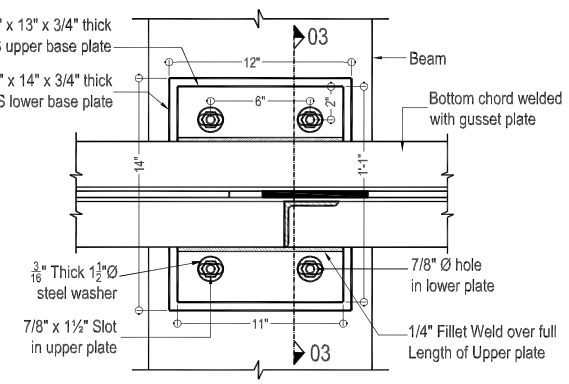

SECTION 02-02

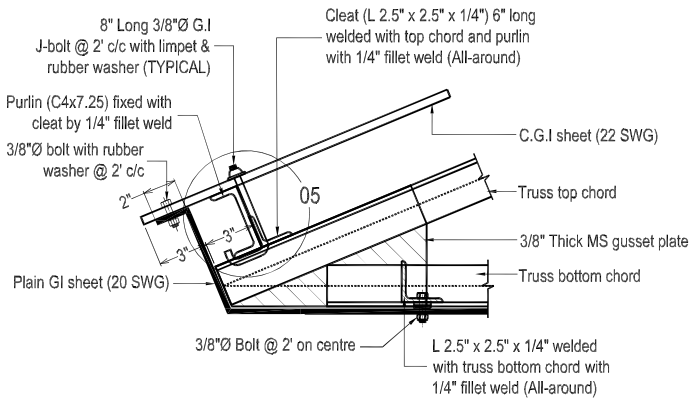

END OF TRUSS PORTION (Elevation)

(All trusses)

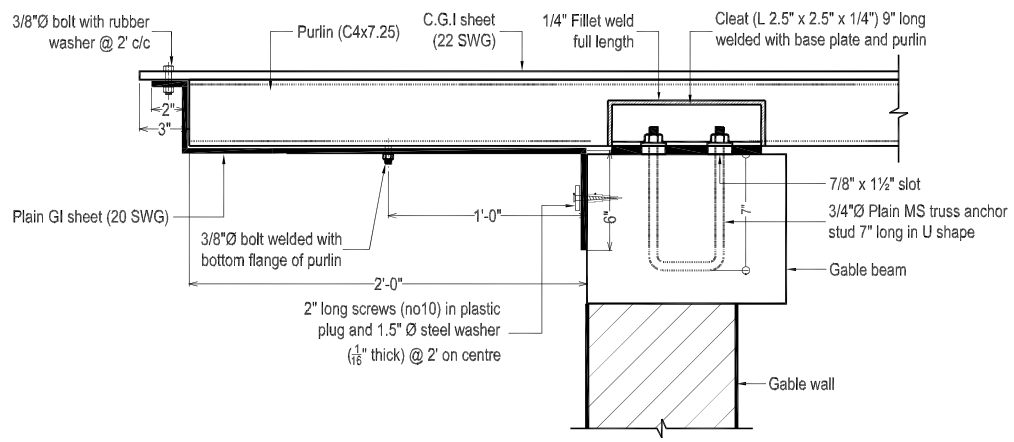

PGI SHEET DETAIL AT GABLE WALL

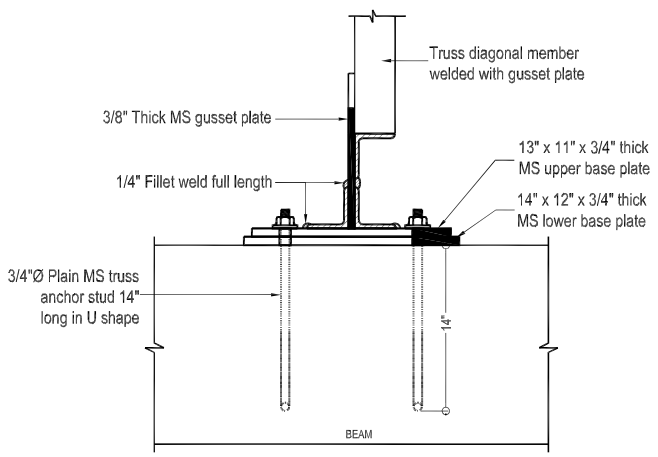

SECTION 03-03

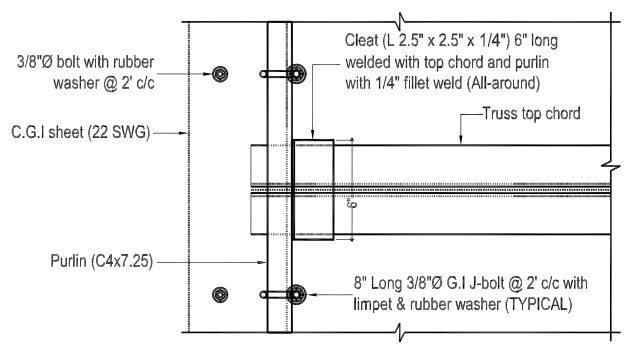

END OF TRUSS PORTION (Plan)

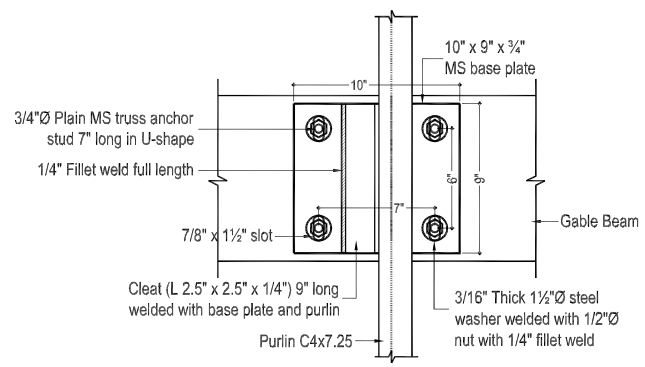

CONNECTION DETAIL
FOR PURLIN ON GABLE WALL

CLIENT:	CONSULTANT:					DRAWN	PROJECT:	TITLE:	
KHYBER PAKHTUNKHWA INTEGRATED TOURISM AND ENTERPRISE DEVELOPMENT PROJECT **PMU (KITE) C&W DEPARTMENT KP**	NATIONAL ENGINEERING SERVICES PAKISTAN (PVT.) LTD.				SUBMITTED		**REHABILITATION AND REMODELING OF MANKIAL BADA SARAI ROAD IN DISTRICT SWAT - 22 KM** **LOT-01: KM 0+000 ~ 09+300**	**REST AREA(DISPENSARY BLOCK)** TRUSS DETAIL	
					RECOMMNED				
					CHD./VER			DATE:	DWG. NO
		REV	DATE	DESCRIPTION	APPROVED			JANUARY 2022	38164/102/TD/ RA/LOT-01/03

R.c.c columns upto DPC level .
At DPC 9" thick tie beam will be provided over 9" thick brick walls, no extra DPC then required.After Providing Tie beam 9"X9" on walls & columns at shown position.
Normal 9" thick brick wall is provided.

NOTES:-

(1) ALL REINFORCING STEEL IS DEFORMED AS PER ASTM A-615 40000 PSI MIN. YIELD STRENGTH. AND MIN. ULTIMATE STRENGTH OF 65000 PSI .
(2) ALL CONCRETE IS 3000 PSI CYLINDER STRENGTH AT 28 DAYS WITH MIN. CEMENT CONTENT 400 KG/m
(3) CLEAR CONCRETE COVER TO MAIN REINFORCING BARS IS AS BELOW.
SLABS = 3/4" FOOTING ON 1:4:8 = 2"
BEAMS = 1½" COLUMNS = 1½"
(4) ALL DRAWINGS SHOULD BE READ IN CONJUNCTION WITH THE RELEVENT ARCHITECTURAL AND SERVICES DRGS.
(5) LEAN IS 1000 PSI CYLINDER STRENGTH AT 28 DAYS MIN MIX 1:4:8
(6) ALL LAPS ARE 30 TIMES BAR DIAMETER FOR VERTICAL & 42 D FOR HOR.
(7) EXCAVATION INCLUDING DEWATERING, BRACING OF EXCAVATION TO SAFEGUARD THE ADJOINING PROPERTY AND LIFE AND DEWATERING PITS IN CASE OF RAIN IS CONTRACTOR RESPONSIBILITY. FOR THAT MATTER, A QUALIFIED GEO-TECHNICAL ENGINEER SHOULD BE APPOINTED ON HIS ROLE.
(8) (a) IST TIE BEAM AT FOUNDATION LEVEL.
(b) 2ND TIE BEAM AT D.P.C. LEVEL.
(C) 3RD TIE BEAM AT WINDOW LINTLE LEVEL.
(d) R.C.C COLUMN 9"x 9" AT CORNER OF BUILDING SHAULD BE PROVIDED.

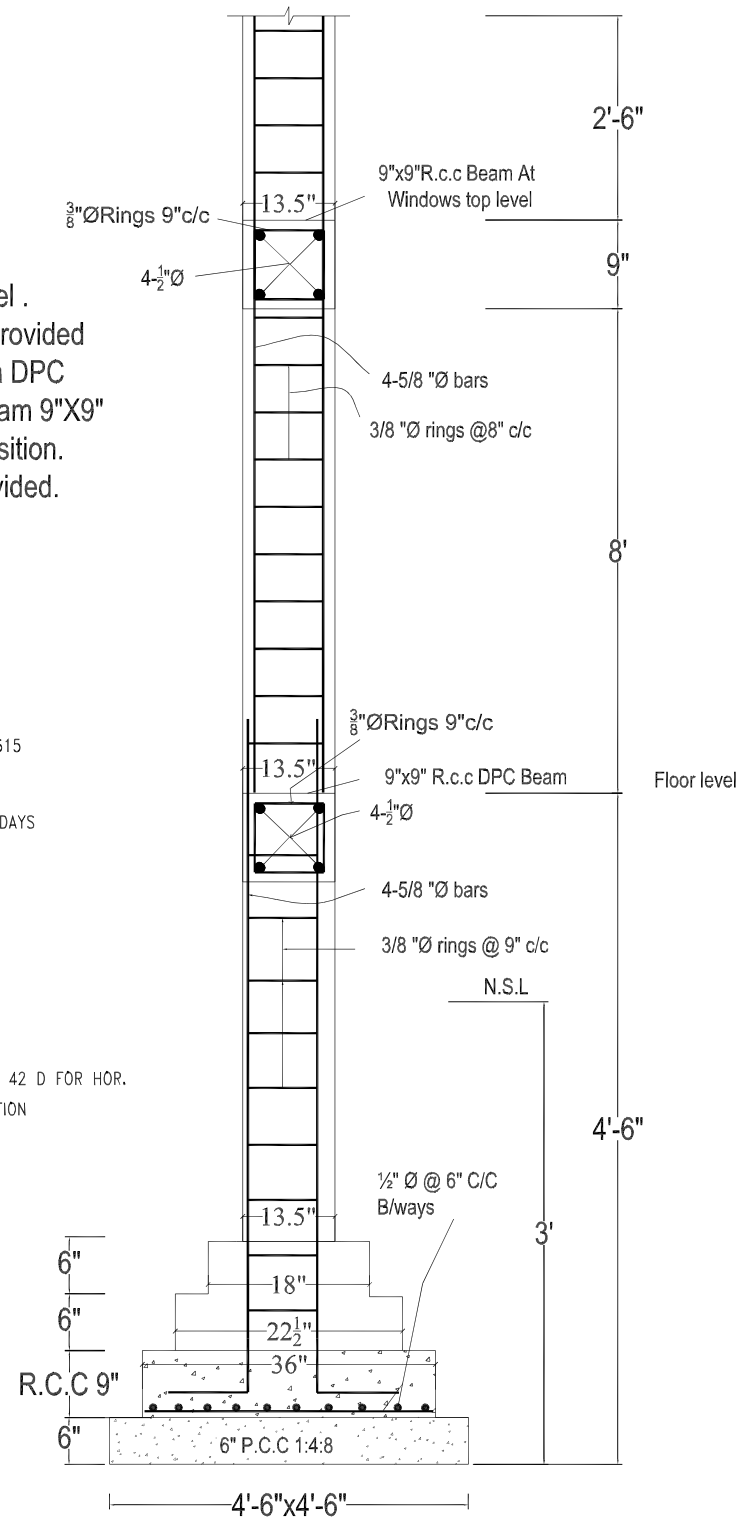

R.c.c Foundation Detail
For R.c.c Column Portion

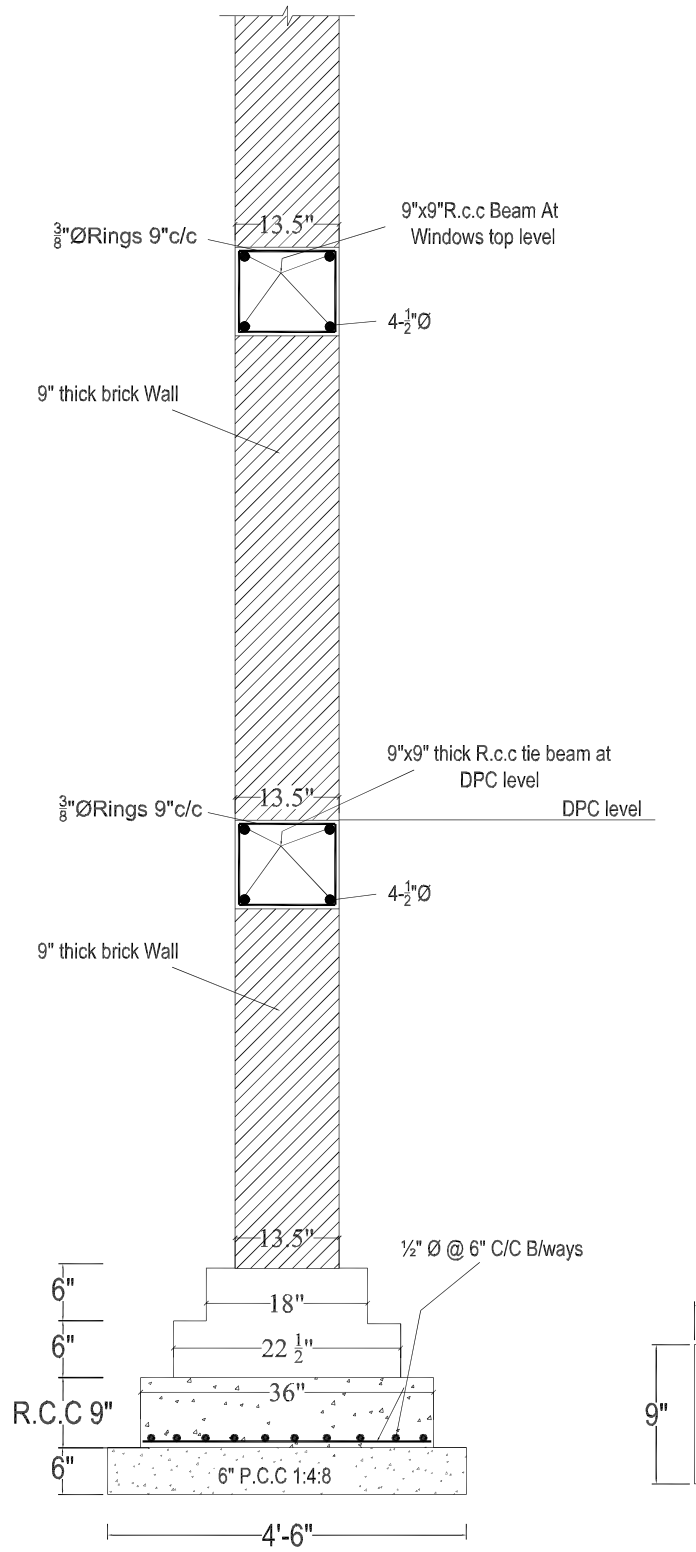

R.C.C. STRIP FOUNDATION
FOR GROUND FLOOR

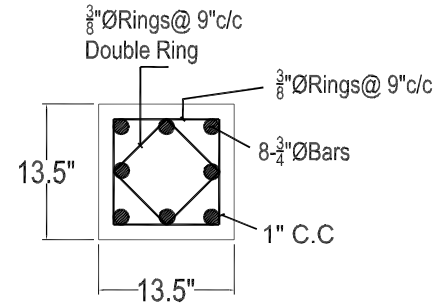

VERANDAH COLUMN DETAIL
C-2

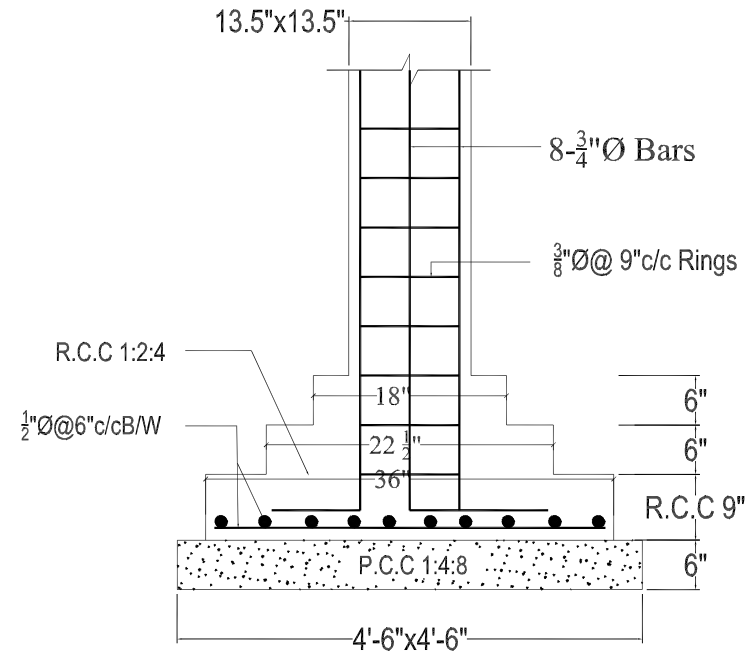

VERANDAH COLUMNS FOUNDATION DETAIL
C-1

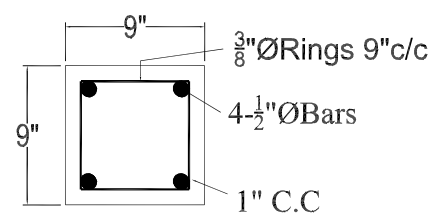

TIE BEAM

CLIENT:	CONSULTANT:					DRAWN	PROJECT:	TITLE:
KHYBER PAKHTUNKHWA INTEGRATED TOURISM AND ENTERPRISE DEVELOPMENT PROJECT PMU (KITE) C&W DEPARTMENT KP	NATIONAL ENGINEERING SERVICES PAKISTAN (PVT.) LTD.				SUBMITTED		REHABILITATION AND REMODELING OF MANKIAL BADA SARAI ROAD IN DISTRICT SWAT - 22 KM LOT-01: KM 0+000 ~ 09+300	REST AREA (DISPENSARY BLOCK) FOUNDATION, COLUMNS AND WALLS DETAIL
					RECOMMNED			
					CHD./VER			DATE: JANUARY 2022 / DWG. NO 38164/102/TD/ RA/LOT-01/04
		REV	DATE	DESCRIPTION	APPROVED			

FRONT ELEVATION

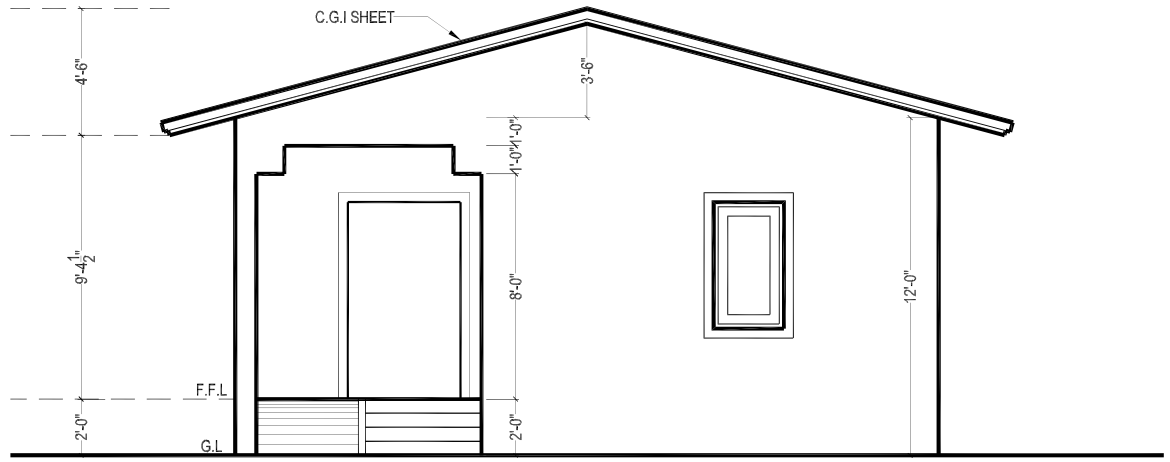

RIGHT SIDE ELEVATION

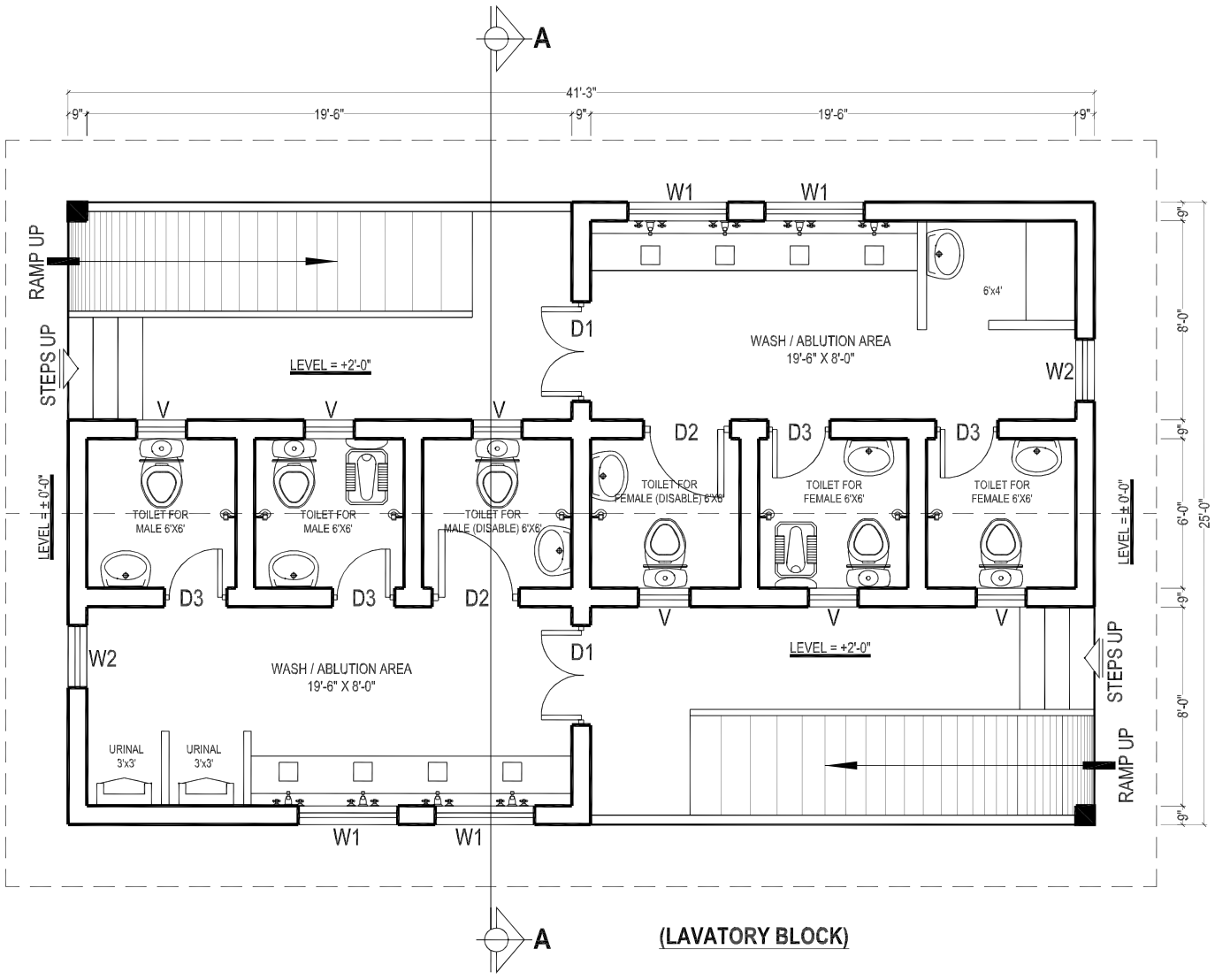

(LAVATORY BLOCK)

PLAN

SCHEDULE OF OPENING			
S,NO.	TYPE	SIZE	S/LEVEL
01	D1	4'-0" X 7'-0"	±0'-0"
02	D2	3'-6" X 7'-0"	±0'-0"
03	D3	2'-6" X 7'-0"	±0'-0"
04	W1	4'-0" X 4'-6"	+2'-6"
05	W2	2'-6" X 4'-6"	+2'-6"
06	V	2'-0" X 2'-0"	+5'-0"

BUILDING SPECIFICATION

* PCC (1:4:8) IN FOUNDATIONS.
* 2" THICK DPC (DAMP PROOF COURSE) IN (1:2:4) PCC WITH 2 COATS OF HOT BITUMEN WITH POLYTHENE SHEET.
* BURNT BRICK MASONRY IN 1:6 CEMENT SAND RATIO MORTAR.
* 1/2" THICK PLASTER ON WALLS IN 1:6 CEMENT SAND RATIO.
* ALL LINTELS & BEAMS IN (1:2:4) CEMENT: SAND: AGGREGATE RATIO WITH 14 DAYS CURING.
* ALL ELECTRICAL WIRING TO BE CONCEALED.
* ALL LOAD BEARING WALLS SHALL BE MINIMUM 9" THICK.
* ALL PARTITION WALLS SHALL BE 9" THICK.
* THEN 1 1/2" BRICK TILES SET IN 1:3 CEMENT SAND RATIO.
* ALL INTER FLOOR SLABS SHALL BE COVERED WITH 2" OF PCC (1:4:8) IN SLOPE THEN 24" X 24" IMPORTED CERAMIC TILES AS APPROVED BY THE ENGINEER.
* ALL GROUND FLOORS SHALL BE LAID ON COMPACTED EARTH THEN 6" OF WATERED AND RAMMED SAND THEN 4" OF (1:4:8) IN SLOPE THEN 2" (1:2:4) THEN 24" X 24" IMPORTED CERAMIC TILES A: APPROVED BY THE ENGINEER.

CLIENT:	CONSULTANT:	REV	DATE	DESCRIPTION		DRAWN	PROJECT:	TITLE:	
KHYBER PAKHTUNKHWA INTEGRATED TOURISM AND ENTERPRISE DEVELOPMENT PROJECT PMU (KITE) C&W DEPARTMENT KP	NATIONAL ENGINEERING SERVICES PAKISTAN (PVT.) LTD.				SUBMITTED RECOMMNED CHD./VER APPROVED		REHABILITATION AND REMODELING OF MANKIAL BADA SARAI ROAD IN DISTRICT SWAT - 22 KM LOT-01: KM 0+000 ~ 09+300	REST AREA (LAVATORY/ PUBLIC TOILETS BLOCK) PLAN , ELEVATION,SPECIFICATION	
								DATE: JANUARY 2022	DWG. NO 38164/102/TD/ RA/LOT-01/05

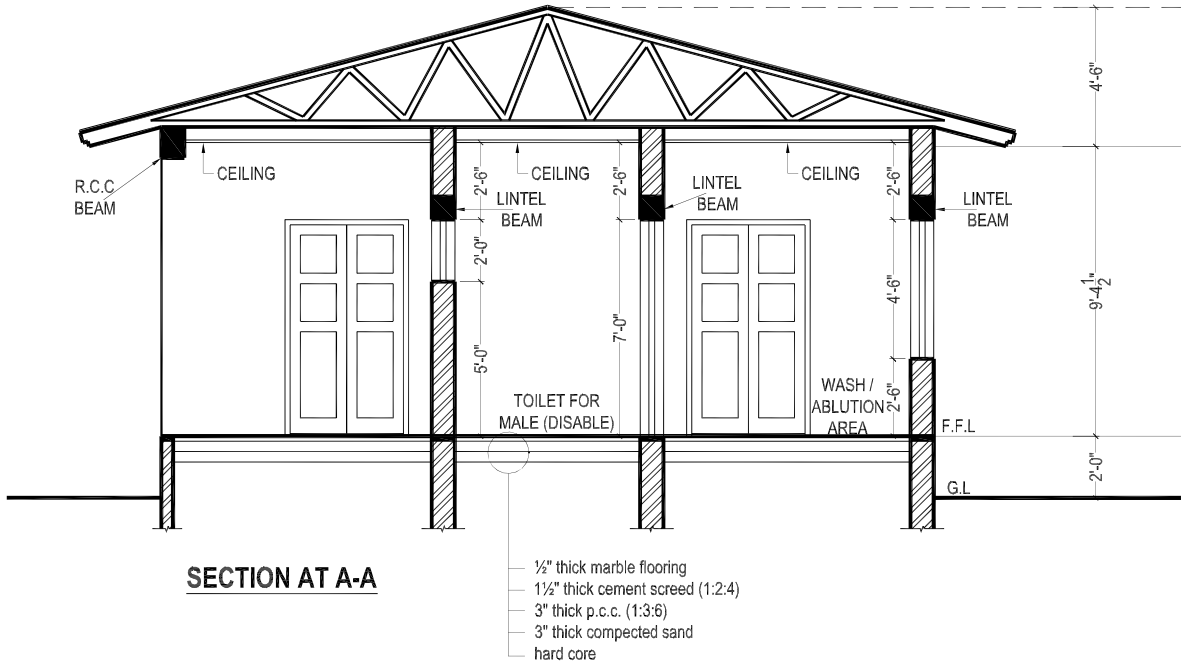

SECTION AT A-A

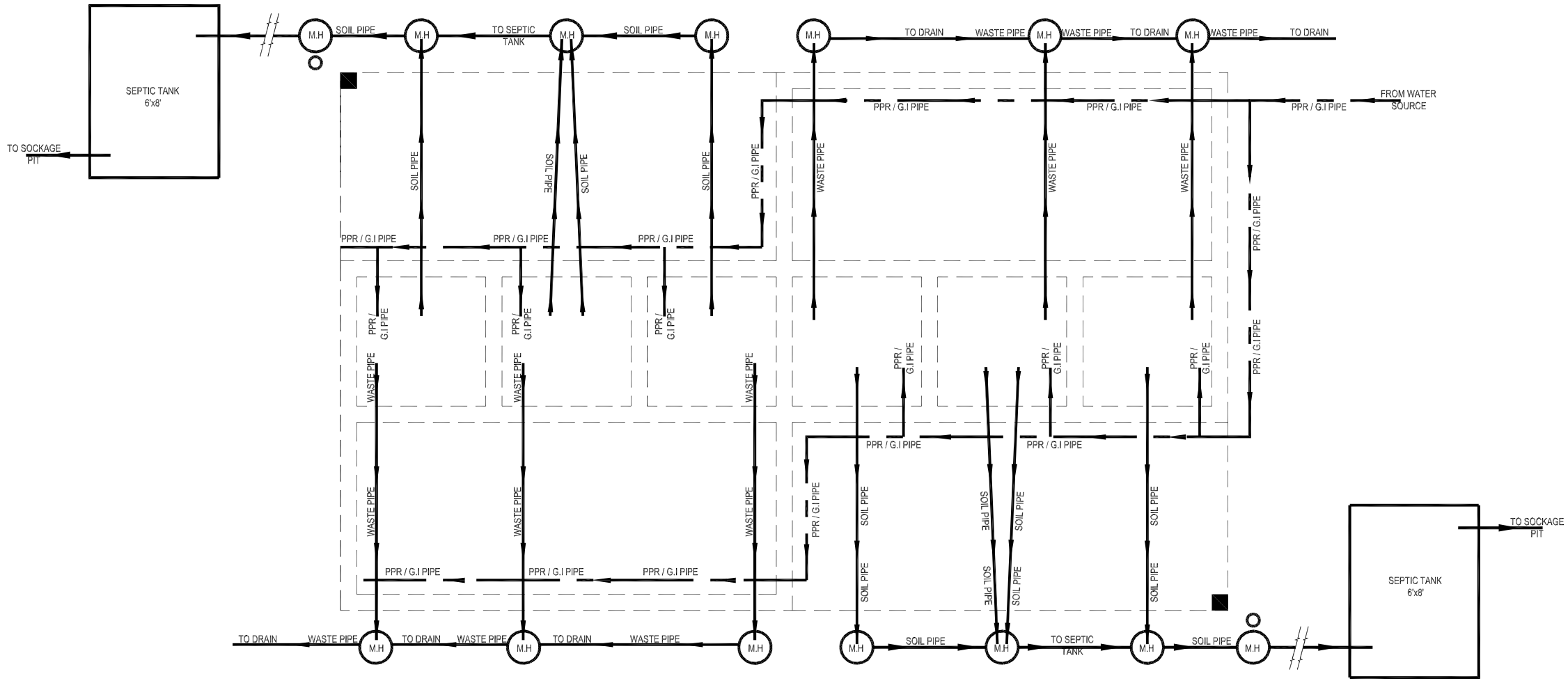

SEWER & WATER SUPPLY PLAN

CLIENT:	CONSULTANT:					DRAWN	PROJECT:	TITLE:
KHYBER PAKHTUNKHWA INTEGRATED TOURISM AND ENTERPRISE DEVELOPMENT PROJECT **PMU (KITE) C&W DEPARTMENT KP**	NATIONAL ENGINEERING SERVICES PAKISTAN (PVT.) LTD.				SUBMITTED		**REHABILITATION AND REMODELING OF MANKIAL BADA SARAI ROAD IN DISTRICT SWAT - 22 KM** **LOT-01: KM 0+000 ~ 09+300**	REST AREA (LAVATORY / PUBLIC TOILETS BLOCK) SEWER AND WATER SUPPLY PLAN & SECTION
					RECOMMNED			
					CHD./VER			DATE: JANUARY 2022 / DWG. NO 38164/102/TD/ RA/LOT-01/06
		REV	DATE	DESCRIPTION	APPROVED			

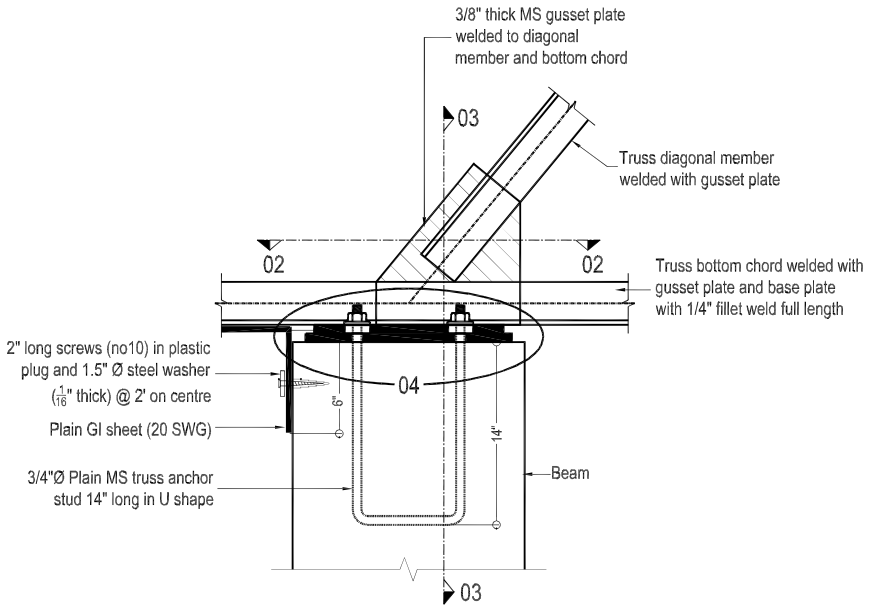

BASE PLATE DETAIL

(All trusses)

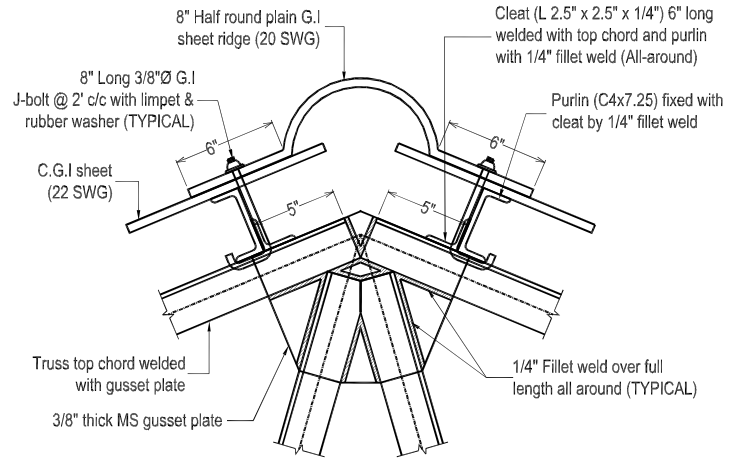

TYPICAL TOP CHORD CONNECTION DETAIL

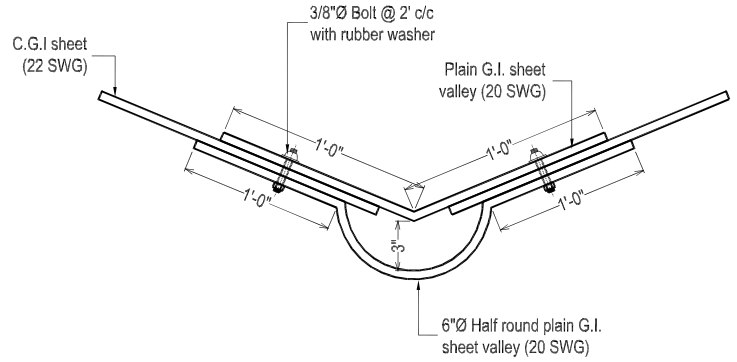

VALLEY DETAIL

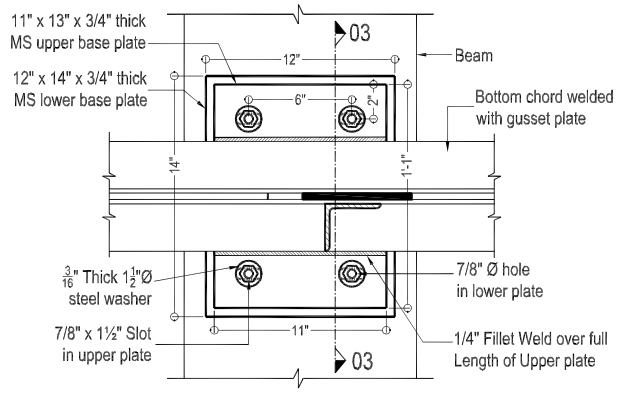

SECTION 02-02

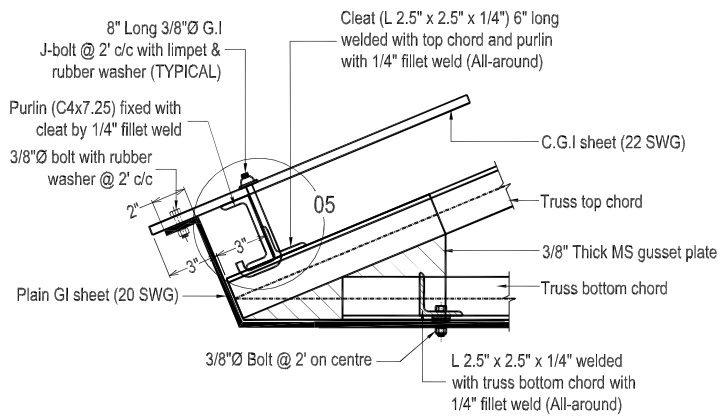

END OF TRUSS PORTION (Elevation)

(All trusses)

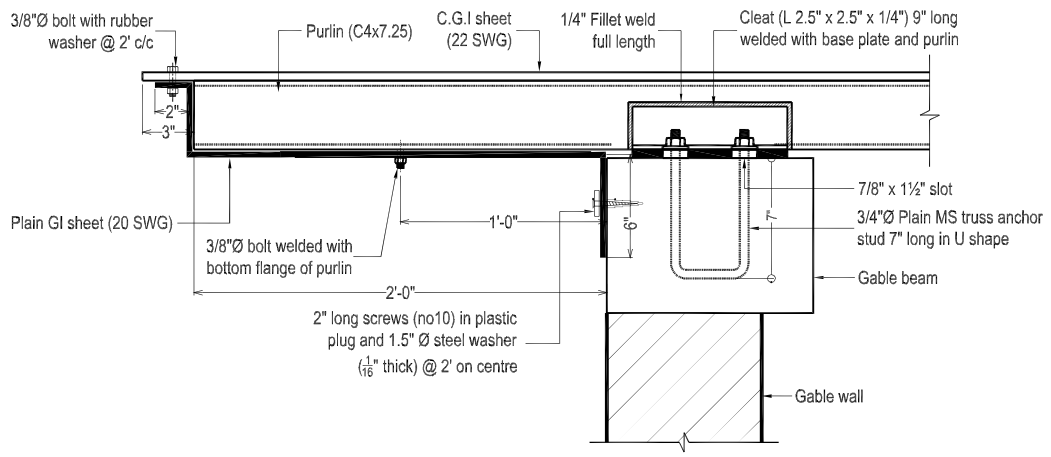

PGI SHEET DETAIL AT GABLE WALL

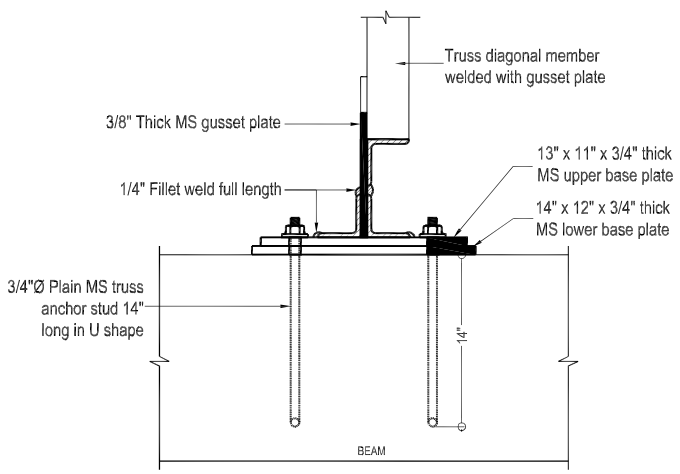

SECTION 03-03

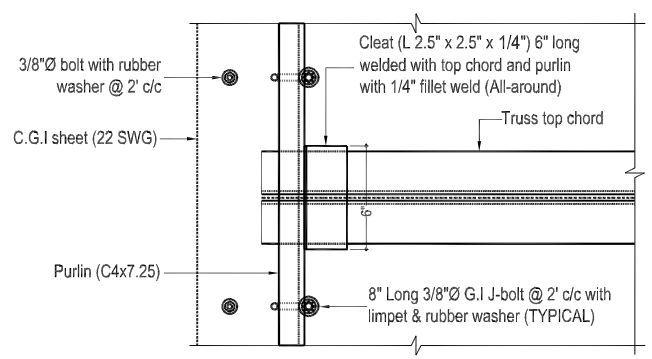

END OF TRUSS PORTION (Plan)

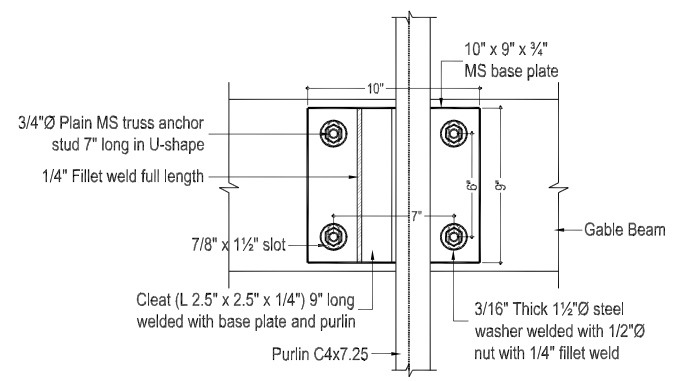

CONNECTION DETAIL
FOR PURLIN ON GABLE WALL

CLIENT:	CONSULTANT:					DRAWN	PROJECT:	TITLE:	
KHYBER PAKHTUNKHWA INTEGRATED TOURISM AND ENTERPRISE DEVELOPMENT PROJECT **PMU (KITE) C&W DEPARTMENT KP**	NATIONAL ENGINEERING SERVICES PAKISTAN (PVT.) LTD.				SUBMITTED		**REHABILITATION AND REMODELING OF MANKIAL BADA SARAI ROAD IN DISTRICT SWAT - 22 KM** **LOT-01: KM 0+000 ~ 09+300**	REST AREA (LAVATORY/ PUBLIC TOILETS BLOCK) TRUSS DETAIL	
					RECOMMNED				
					CHD./VER			DATE:	DWG. NO
		REV	DATE	DESCRIPTION	APPROVED			JANUARY 2022	38164/102/TD/ RA/LOT-01/07

R.c.c columns upto DPC level .
At DPC 9" thick tie beam will be provided over 9" thick brick walls, no extra DPC then required.After Providing Tie beam 9"X9" on walls & columns at shown position.
Normal 9" thick brick wall is provided.

NOTES:-

(1) ALL REINFORCING STEEL IS DEFORMED AS PER ASTM A-615 40000 PSI MIN. YIELD STRENGTH. AND MIN. ULTIMATE STRENGTH OF 65000 PSI .
(2) ALL CONCRETE IS 3000 PSI CYLINDER STRENGTH AT 28 DAYS WITH MIN. CEMENT CONTENT 400 KG/m
(3) CLEAR CONCRETE COVER TO MAIN REINFORCING BARS IS AS BELOW.
SLABS = 3/4" FOOTING ON 1:4:8 = 2"
BEAMS = 1½" COLUMNS = 1½"
(4) ALL DRAWINGS SHOULD BE READ IN CONJUNCTION WITH THE RELEVENT ARCHITECTURAL AND SERVICES DRGS.
(5) LEAN IS 1000 PSI CYLINDER STRENGTH AT 28 DAYS MIN MIX 1:4:8
(6) ALL LAPS ARE 30 TIMES BAR DIAMETER FOR VERTICAL & 42 D FOR HOR.
(7) EXCAVATION INCLUDING DEWATERING, BRACING OF EXCAVATION TO SAFEGUARD THE ADJOINING PROPERTY AND LIFE AND DEWATERING PITS IN CASE OF RAIN IS CONTRACTOR RESPONSIBILITY. FOR THAT MATTER, A QUALIFIED GEO-TECHNICAL ENGINEER SHOULD BE APPOINTED ON HIS ROLE.
(8) (a) IST TIE BEAM AT FOUNDATION LEVEL.
(b) 2ND TIE BEAM AT D.P.C. LEVEL.
(C) 3RD TIE BEAM AT WINDOW LINTLE LEVEL.
(d) R.C.C COLUMN 9"x 9" AT CORNER OF BUILDING SHAULD BE PROVIDED.

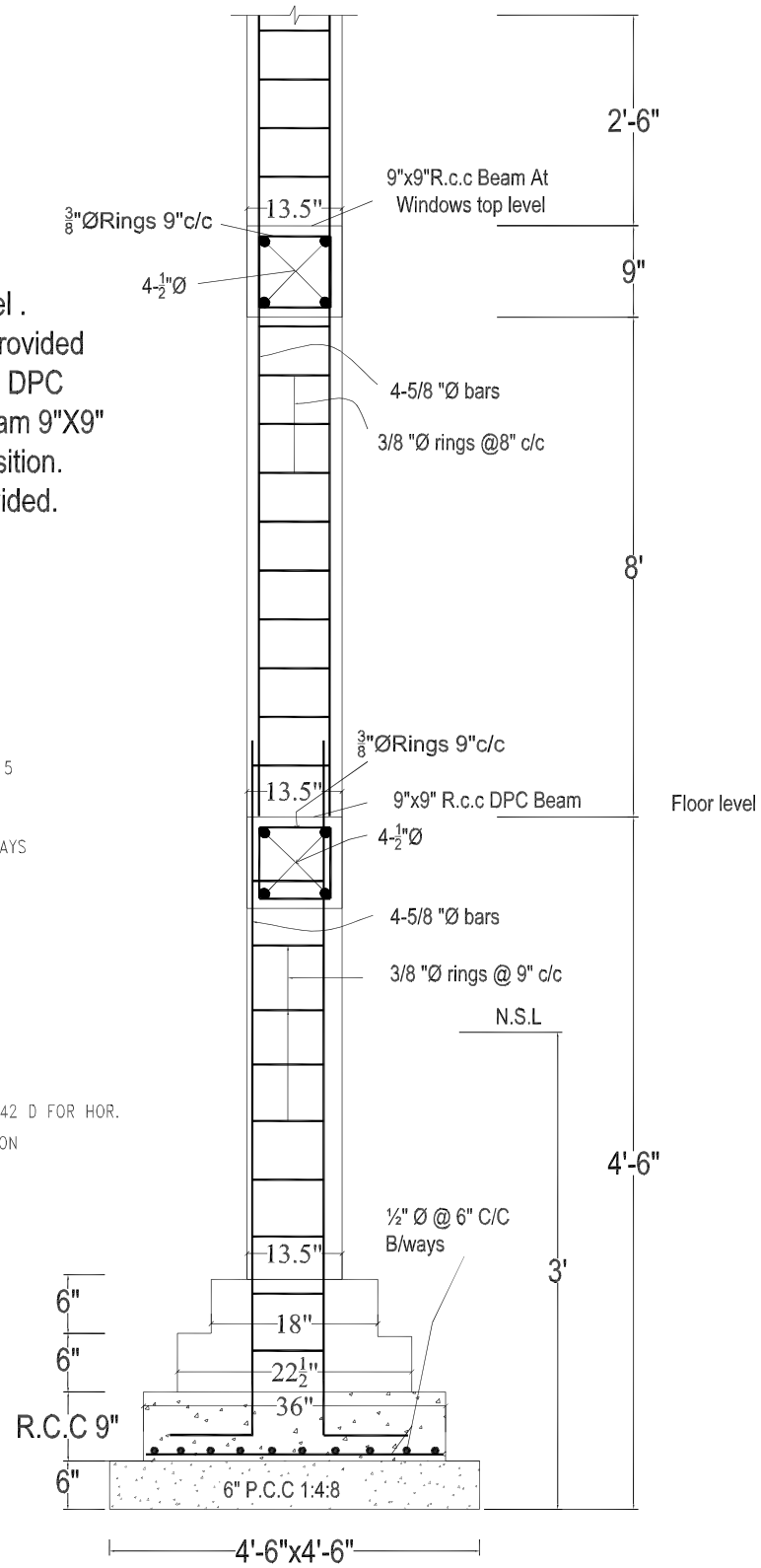

R.c.c Foundation Detail
For R.c.c Column Portion

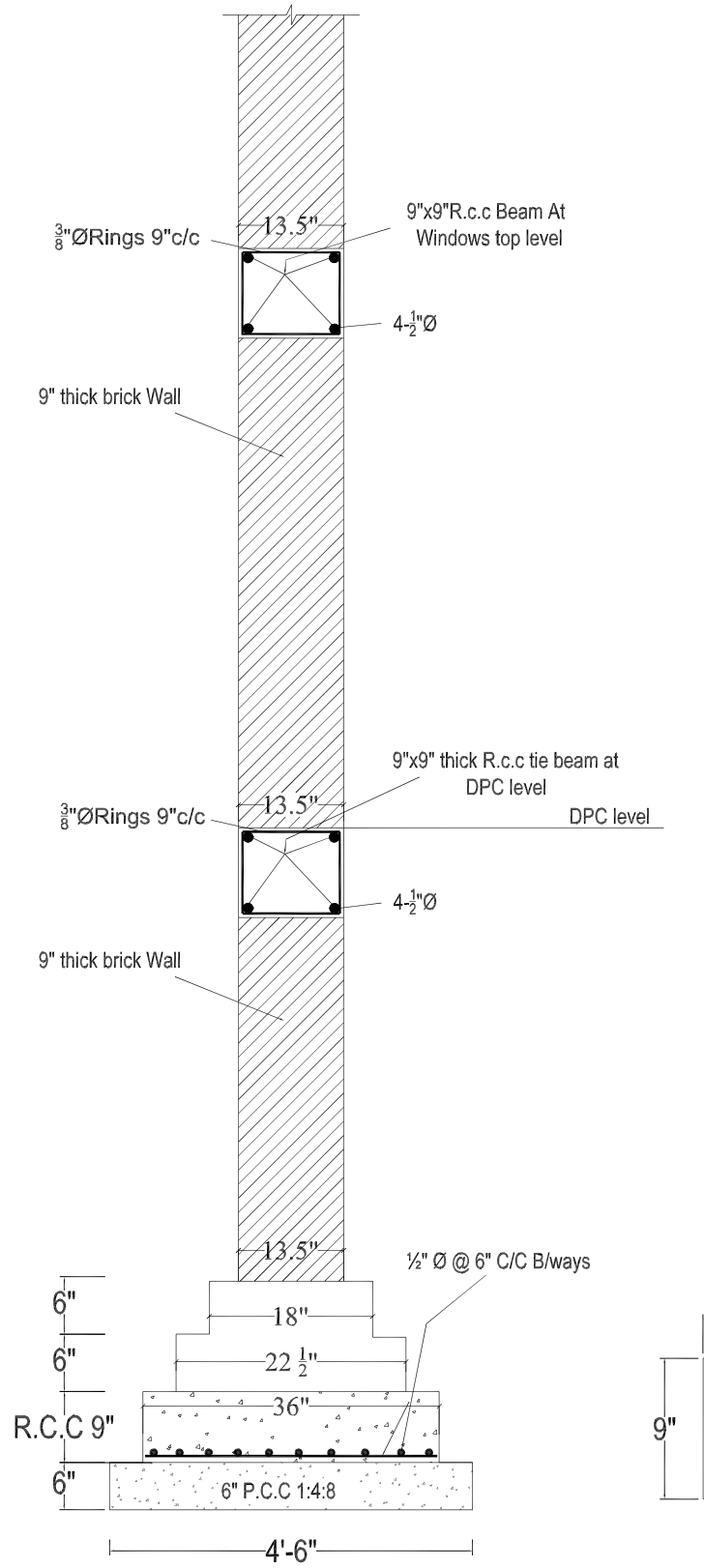

R.C.C. STRIP FOUNDATION
FOR GROUND FLOOR

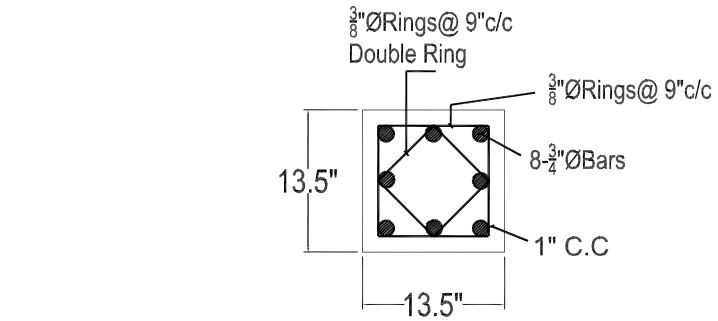

VERANDAH COLUMN DETAIL
C-2

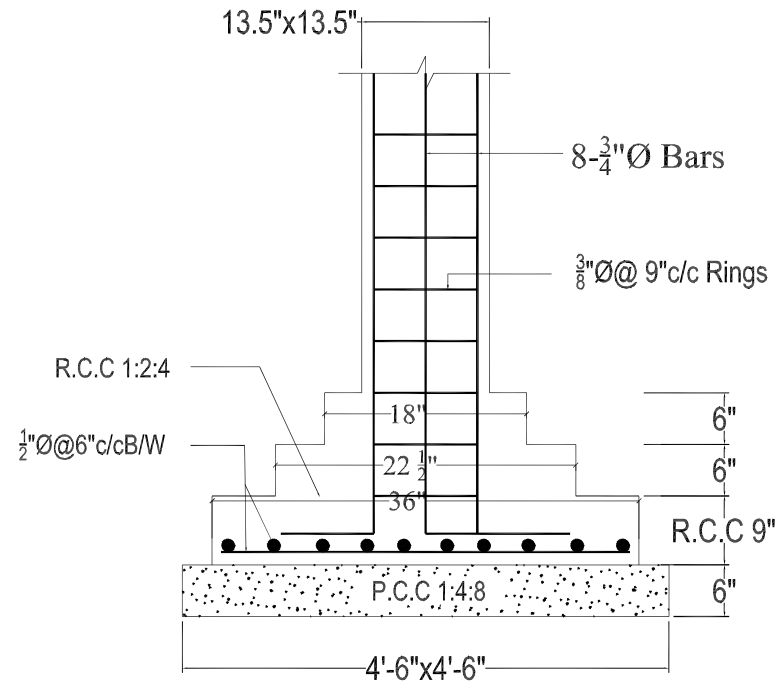

VERANDAH COLUMNS FOUNDATION DETAIL
C-1

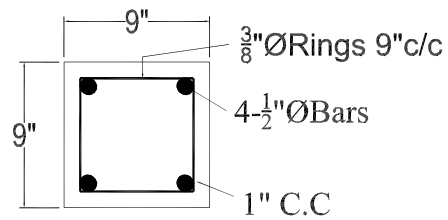

TIE BEAM

CLIENT:	CONSULTANT:					DRAWN	PROJECT:	TITLE:
KHYBER PAKHTUNKHWA INTEGRATED TOURISM AND ENTERPRISE DEVELOPMENT PROJECT PMU (KITE) C&W DEPARTMENT KP	NATIONAL ENGINEERING SERVICES PAKISTAN (PVT.) LTD.				SUBMITTED		REHABILITATION AND REMODELING OF MANKIAL BADA SARAI ROAD IN DISTRICT SWAT - 22 KM LOT-01: KM 0+000 ~ 09+300	REST AREA (LAVATORY / PUBLIC TOILETS BLOCK) FOUNDATION, COLUMNS AND WALLS DETAIL
					RECOMMNED			
					CHD./VER			DATE: JANUARY 2022 / DWG. NO 38164/102/TD/ RA/LOT-01/08
		REV	DATE	DESCRIPTION	APPROVED			

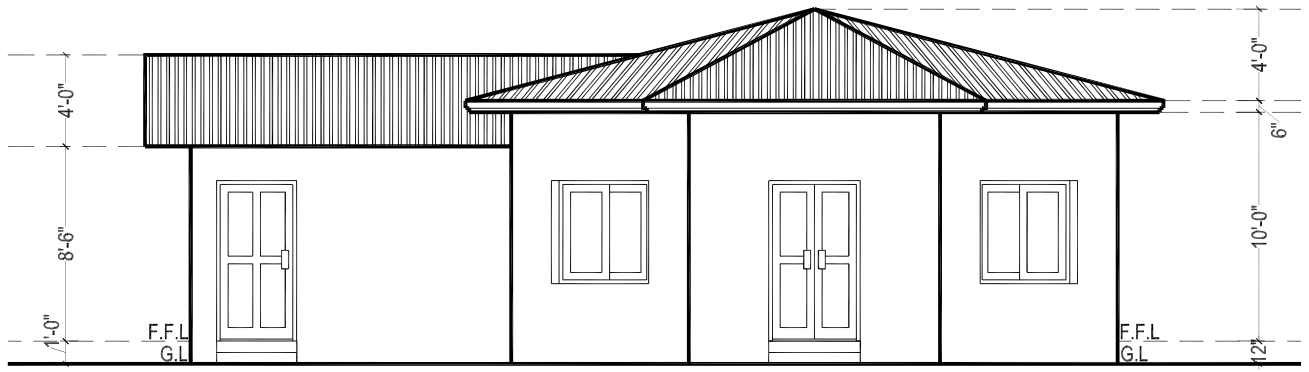

FRONT ELEVATION

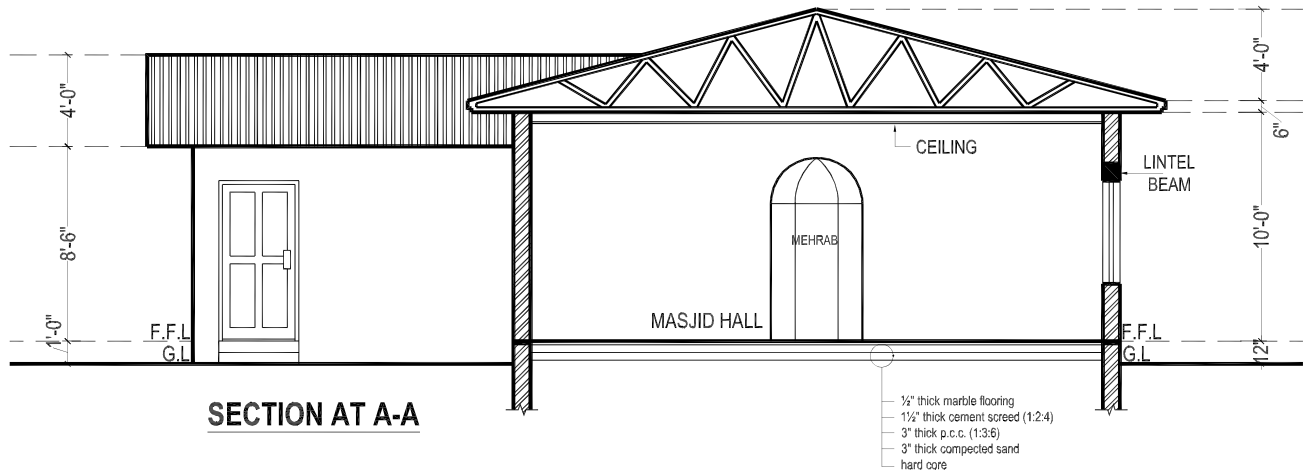

SECTION AT A-A

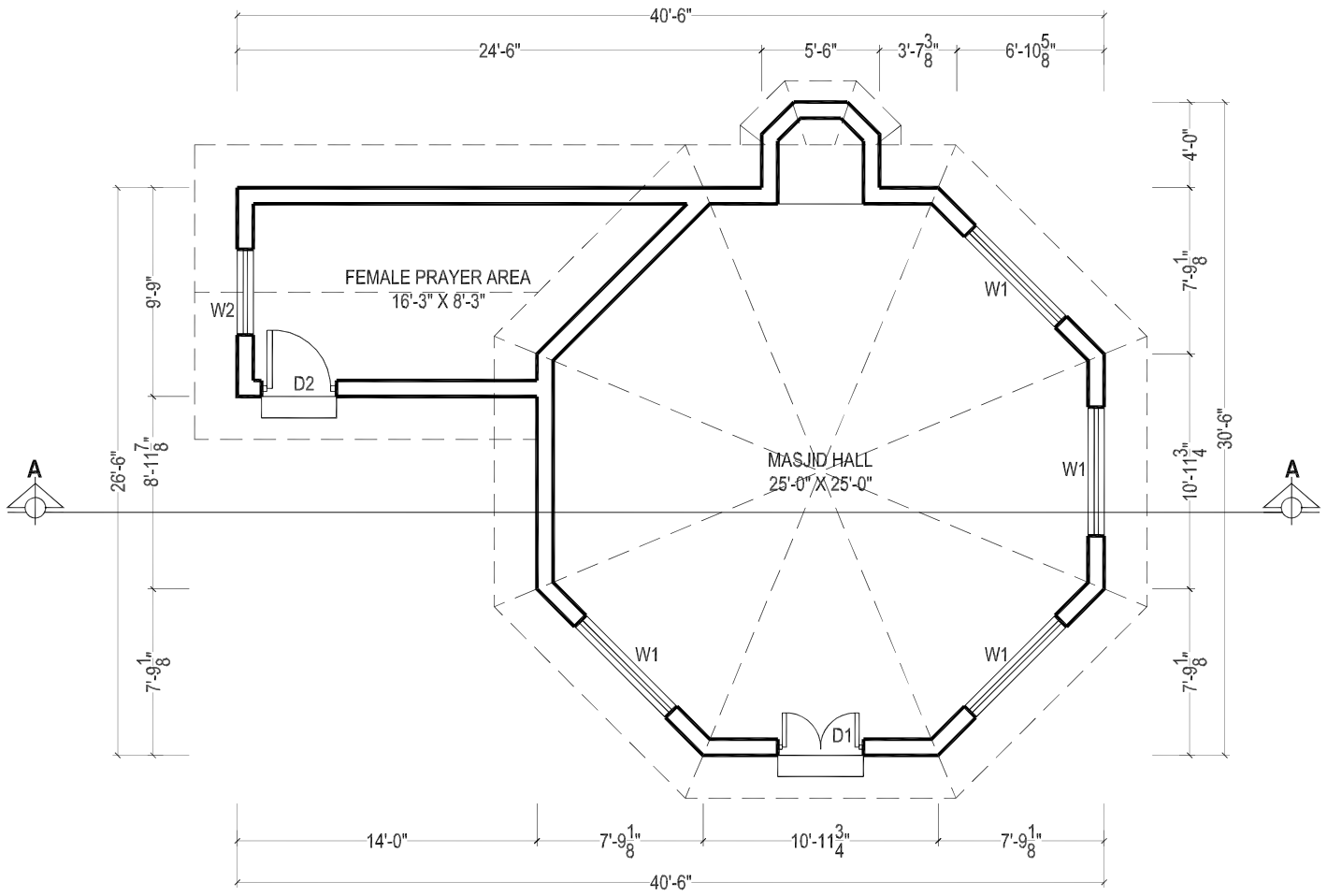

MASJID PLAN

COVERED AREA = 768 SFT

SCHEDULE OF OPENING

S.NO.	TYPE	SIZE	S/LEVEL
01	D1	4'-0" X 7'-0"	±0'-0"
02	D2	3'-6" X 7'-0"	±0'-0"
04	W1	6'-0" X 4'-6"	+2'-6"
05	W2	4'-0" X 4'-6"	+2'-6"

BUILDING SPECIFICATION

* PCC (1:4:8) IN FOUNDATIONS.
* 2" THICK DPC (DAMP PROOF COURSE) IN (1:2:4) PCC WITH 2 COATS OF HOT BITUMEN WITH POLYTHENE SHEET.
* BURNT BRICK MASONRY IN 1:6 CEMENT SAND RATIO MORTAR.
* 1/2" THICK PLASTER ON WALLS IN 1:6 CEMENT SAND RATIO.
* ALL LINTELS & BEAMS IN (1:2:4) CEMENT: SAND: AGGREGATE RATIO WITH 14 DAYS CURING.
* ALL ELECTRICAL WIRING TO BE CONCEALED.
* ALL LOAD BEARING WALLS SHALL BE MINIMUM 9" THICK.
* ALL PARTITION WALLS SHALL BE 9" THICK.
* THEN 1 1/2" BRICK TILES SET IN 1:3 CEMENT SAND RATIO.
* ALL INTER FLOOR SLABS SHALL BE COVERED WITH 2" OF PCC (1:4:8) IN SLOPE THEN 24" X 24" IMPORTED CERAMIC TILES AS APPROVED BY THE ENGINEER.
* ALL GROUND FLOORS SHALL BE LAID ON COMPACTED EARTH THEN 6" OF WATERED AND RAMMED SAND THEN 4" OF (1:4:8) IN SLOPE THEN 2" (1:2:4) THEN 24" X 24" IMPORTED CERAMIC TILES AS APPROVED BY THE ENGINEER.

ENT:

KHYBER PAKHTUNKHWA INTEGRATED TOURISM AND ENTERPRISE DEVELOPMENT PROJECT
PMU (KITE) C&W DEPARTMENT KP

CONSULTANT:

NATIONAL ENGINEERING SERVICES PAKISTAN (PVT.) LTD.

REV	DATE	DESCRIPTION

	DRAWN
SUBMITTED	
RECOMMNED	
CHD./VER	
APPROVED	

PROJECT:

REHABILITATION AND REMODELING OF MANKIAL BADA SARAI ROAD IN DISTRICT SWAT - 22 KM
LOT-01: KM 0+000 ~ 09+300

TITLE:

REST AREA (MASJID BLOCK)
PLAN, ELEVATION, SECTION, SPECIFICATION

DATE: JANUARY 2022

DWG. NO 38164/102/TD/ RA/LOT-01/09

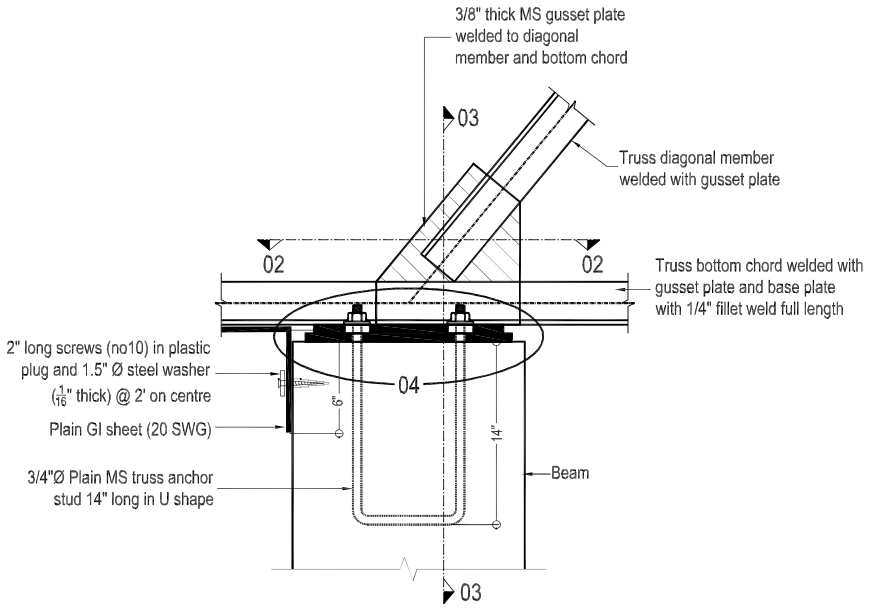

BASE PLATE DETAIL

(All trusses)

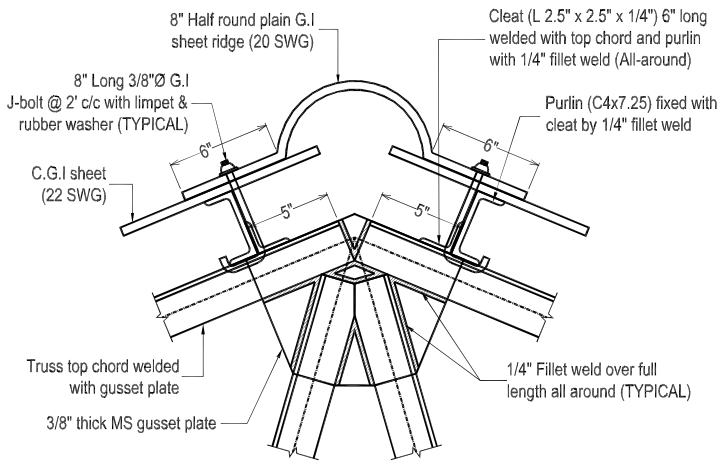

TYPICAL TOP CHORD CONNECTION DETAIL

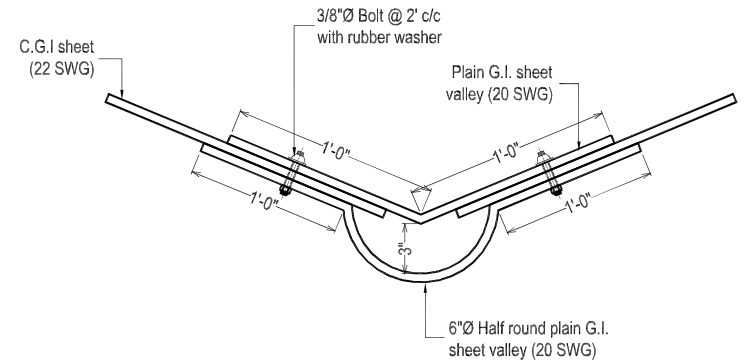

VALLEY DETAIL

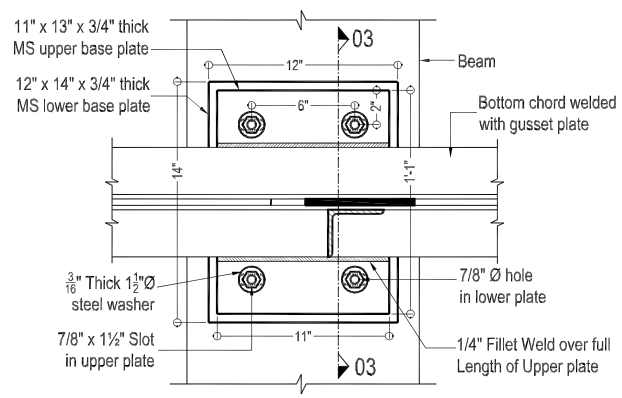

SECTION 02-02

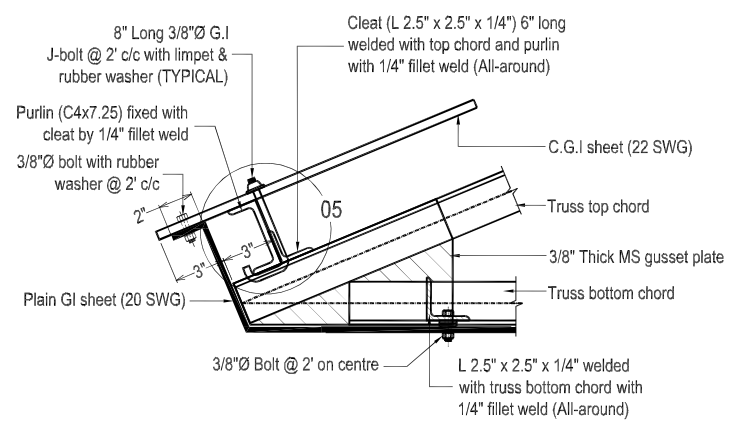

END OF TRUSS PORTION (Elevation)

(All trusses)

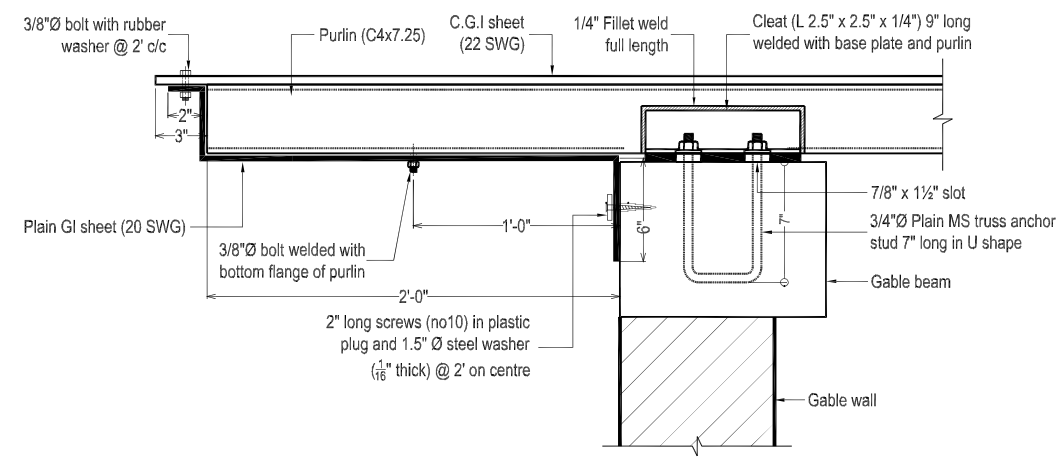

PGI SHEET DETAIL AT GABLE WALL

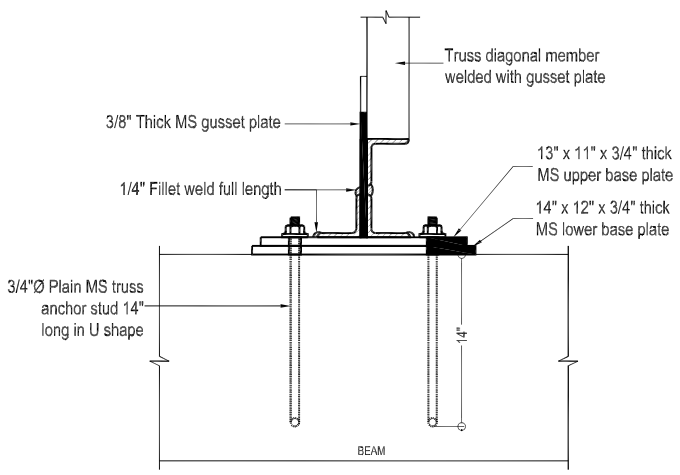

SECTION 03-03

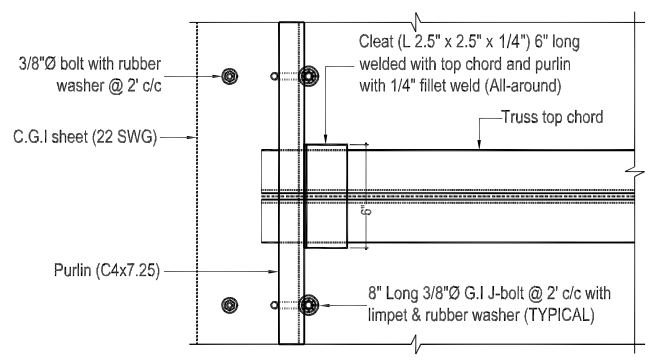

END OF TRUSS PORTION (Plan)

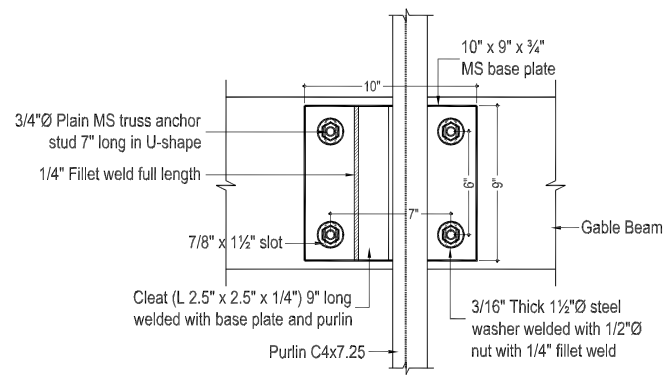

CONNECTION DETAIL
FOR PURLIN ON GABLE WALL

CLIENT:	CONSULTANT:					DRAWN	PROJECT:	TITLE:	
KHYBER PAKHTUNKHWA INTEGRATED TOURISM AND ENTERPRISE DEVELOPMENT PROJECT **PMU (KITE) C&W DEPARTMENT KP**	NATIONAL ENGINEERING SERVICES PAKISTAN (PVT.) LTD.				SUBMITTED		**REHABILITATION AND REMODELING OF MANKIAL BADA SARAI ROAD IN DISTRICT SWAT - 22 KM** **LOT-01: KM 0+000 ~ 09+300**	REST AREA (MASJID) TRUSS DETAIL	
					RECOMMNED				
					CHD./VER			DATE: JANUARY 2022	DWG. NO 38164/102/TD/ RA/LOT-01/10
		REV	DATE	DESCRIPTION	APPROVED				

R.c.c columns upto DPC level .
At DPC 9" thick tie beam will be provided over 9" thick brick walls, no extra DPC then required.After Providing Tie beam 9"X9" on walls & columns at shown position.
Normal 9" thick brick wall is provided.

NOTES:-

(1) ALL REINFORCING STEEL IS DEFORMED AS PER ASTM A-615 40000 PSI MIN. YIELD STRENGTH. AND MIN. ULTIMATE STRENGTH OF 65000 PSI .
(2) ALL CONCRETE IS 3000 PSI CYLINDER STRENGTH AT 28 DAYS WITH MIN. CEMENT CONTENT 400 KG/m
(3) CLEAR CONCRETE COVER TO MAIN REINFORCING BARS IS AS BELOW.
SLABS = 3/4" FOOTING ON 1:4:8 = 2"
BEAMS = 1½" COLUMNS = 1½"
(4) ALL DRAWINGS SHOULD BE READ IN CONJUNCTION WITH THE RELEVENT ARCHITECTURAL AND SERVICES DRGS.
(5) LEAN IS 1000 PSI CYLINDER STRENGTH AT 28 DAYS MIN MIX 1:4:8
(6) ALL LAPS ARE 30 TIMES BAR DIAMETER FOR VERTICAL & 42 D FOR HOR.
(7) EXCAVATION INCLUDING DEWATERING, BRACING OF EXCAVATION TO SAFEGUARD THE ADJOINING PROPERTY AND LIFE AND DEWATERING PITS IN CASE OF RAIN IS CONTRACTOR RESPONSIBILITY. FOR THAT MATTER, A QUALIFIED GEO-TECHNICAL ENGINEER SHOULD BE APPOINTED ON HIS ROLE.
(8) (a) IST TIE BEAM AT FOUNDATION LEVEL.
(b) 2ND TIE BEAM AT D.P.C. LEVEL.
(C) 3RD TIE BEAM AT WINDOW LINTLE LEVEL.
(d) R.C.C COLUMN 9"x 9" AT CORNER OF BUILDING SHAULD BE PROVIDED.

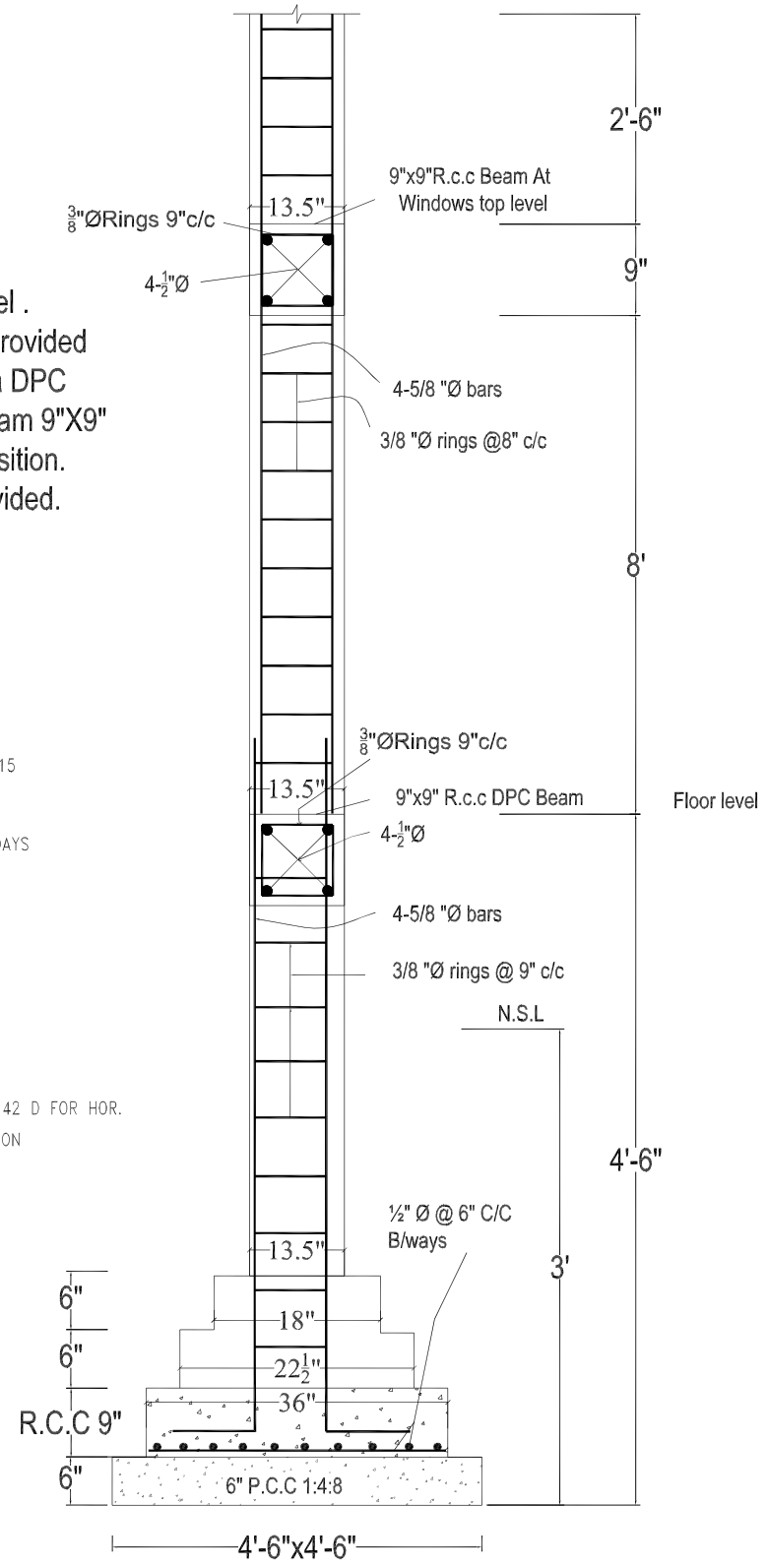

R.c.c Foundation Detail
For R.c.c Column Portion

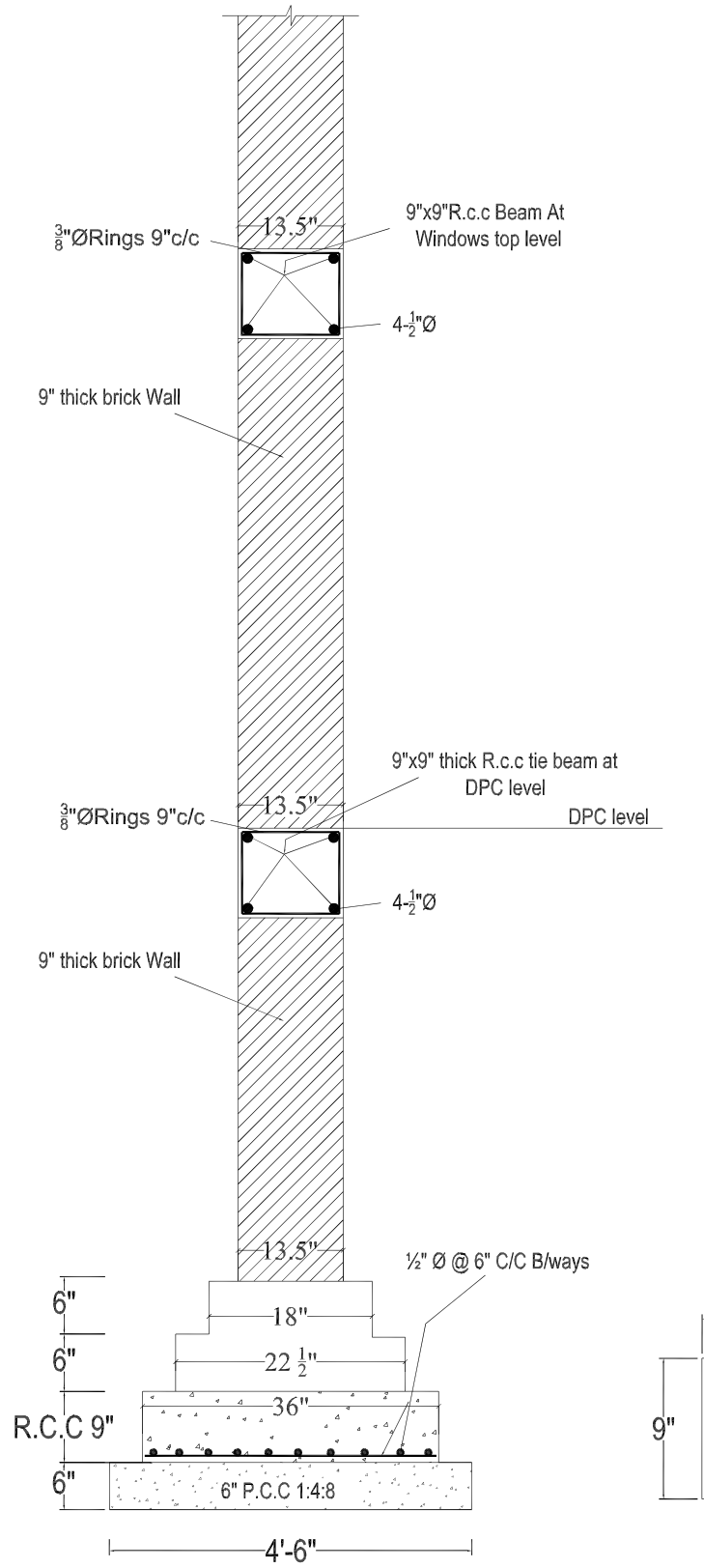

R.C.C. STRIP FOUNDATION
FOR GROUND FLOOR

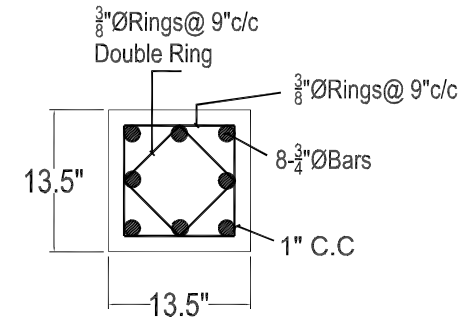

VERANDAH COLUMN DETAIL
C-2

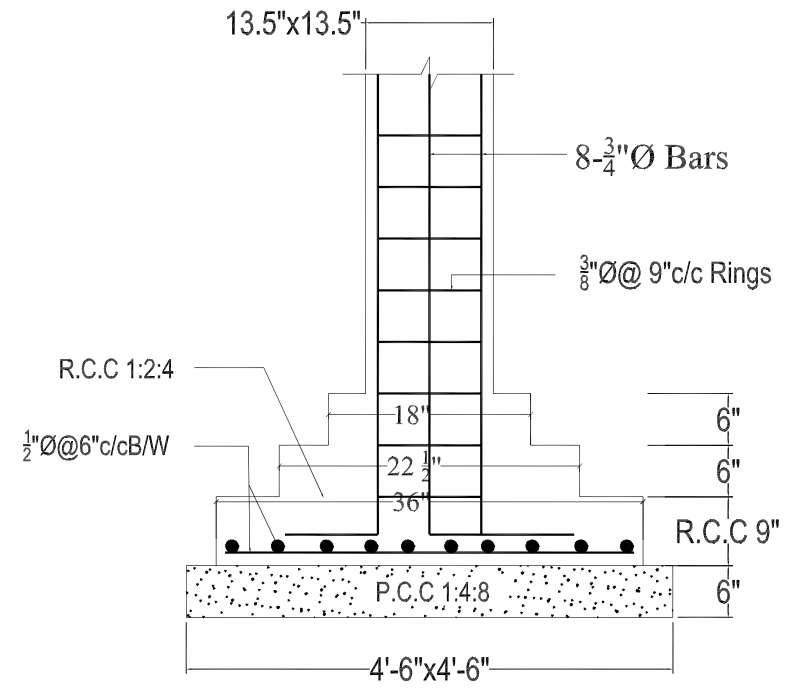

VERANDAH COLUMNS FOUNDATION DETAIL
C-1

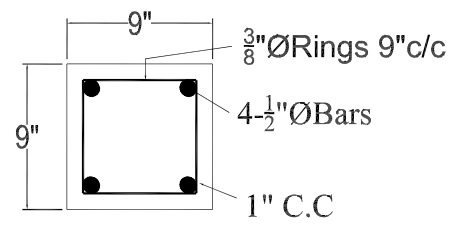

TIE BEAM

CLIENT:	CONSULTANT:					DRAWN	PROJECT:	TITLE:
KHYBER PAKHTUNKHWA INTEGRATED TOURISM AND ENTERPRISE DEVELOPMENT PROJECT PMU (KITE) C&W DEPARTMENT KP	NATIONAL ENGINEERING SERVICES PAKISTAN (PVT.) LTD.				SUBMITTED		REHABILITATION AND REMODELING OF MANKIAL BADA SARAI ROAD IN DISTRICT SWAT - 22 KM LOT-01: KM 0+000 ~ 09+300	REST AREA (MASJID) FOUNDATION, COLUMN AND WALLS DETAIL
					RECOMMNED			DATE: JANUARY 2022 / DWG. NO 38164/102/TD/ RA/LOT-01/11
					CHD./VER			
		REV	DATE	DESCRIPTION	APPROVED			

FRONT ELEVATION

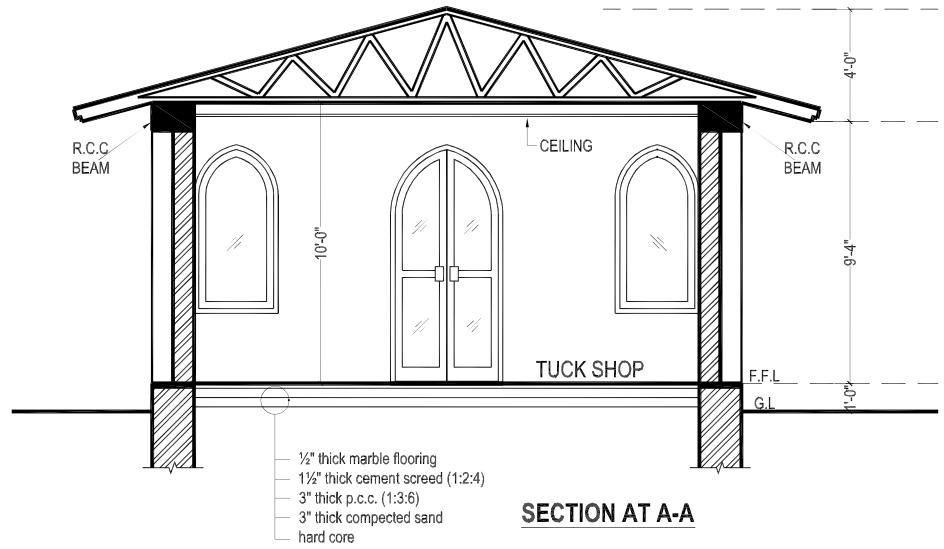

SECTION AT A-A

SCHEDULE OF OPENING			
S,NO.	TYPE	SIZE	S/LEVEL
01	D	4'-0" X 8'-6"	±0'-0"
04	W	3'-0" X 6'-0"	+2'-6"

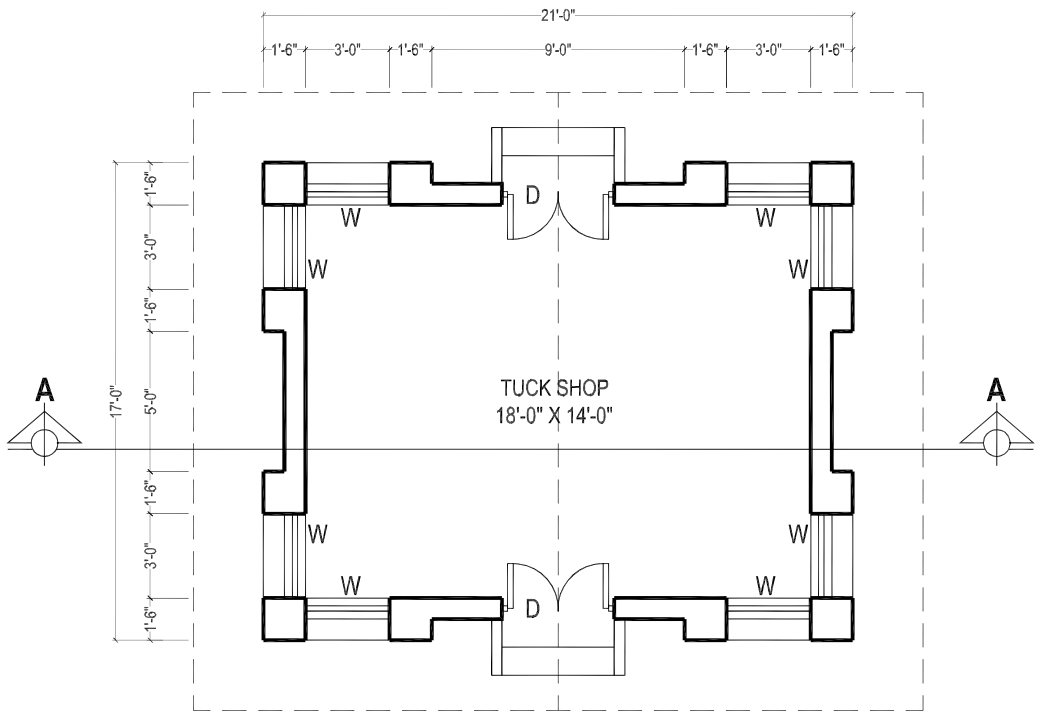

TUCK SHOP

PLAN

COVERED AREA = 357.00 SFT.

BUILDING SPECIFICATION

* PCC (1:4:8) IN FOUNDATIONS.
* 2" THICK DPC (DAMP PROOF COURSE) IN (1:2:4) PCC WITH 2 COATS OF HOT BITUMEN WITH POLYTHENE SHEET.
* BURNT BRICK MASONRY IN 1:6 CEMENT SAND RATIO MORTAR.
* 1/2" THICK PLASTER ON WALLS IN 1:6 CEMENT SAND RATIO.
* ALL LINTELS & BEAMS IN (1:2:4) CEMENT: SAND: AGGREGATE RATIO WITH 14 DAYS CURING.
* ALL ELECTRICAL WIRING TO BE CONCEALED.
* ALL LOAD BEARING WALLS SHALL BE MINIMUM 9" THICK.
* ALL PARTITION WALLS SHALL BE 9" THICK.
* THEN 1 1/2" BRICK TILES SET IN 1:3 CEMENT SAND RATIO.
* ALL INTER FLOOR SLABS SHALL BE COVERED WITH 2" OF PCC (1:4:8) IN SLOPE THEN 24" X 24" IMPORTED CERAMIC TILES AS APPROVED BY THE ENGINEER.
* ALL GROUND FLOORS SHALL BE LAID ON COMPACTED EARTH THEN 6" OF WATERED AND RAMMED SAND THEN 4" OF (1:4:8) IN SLOPE THEN 2" (1:2:4) THEN 24" X 24" IMPORTED CERAMIC TILES AS APPROVED BY THE ENGINEER.

CLIENT:

KHYBER PAKHTUNKHWA INTEGRATED TOURISM AND ENTERPRISE DEVELOPMENT PROJECT
PMU (KITE) C&W DEPARTMENT KP

CONSULTANT:

NATIONAL ENGINEERING SERVICES PAKISTAN (PVT.) LTD.

REV	DATE	DESCRIPTION

SUBMITTED	
RECOMMNED	
CHD./VER	
APPROVED	
DRAWN	

PROJECT:

REHABILITATION AND REMODELING OF MANKIAL BADA SARAI ROAD IN DISTRICT SWAT - 22 KM
LOT-01: KM 0+000 ~ 09+300

TITLE: **REST AREA (TUCK SHOP)**
PLAN, ELEVATION, SECTION, SPECIFICATION

DATE: JANUARY 2022

DWG. NO 38164/102/TD/ RA/LOT-01/12

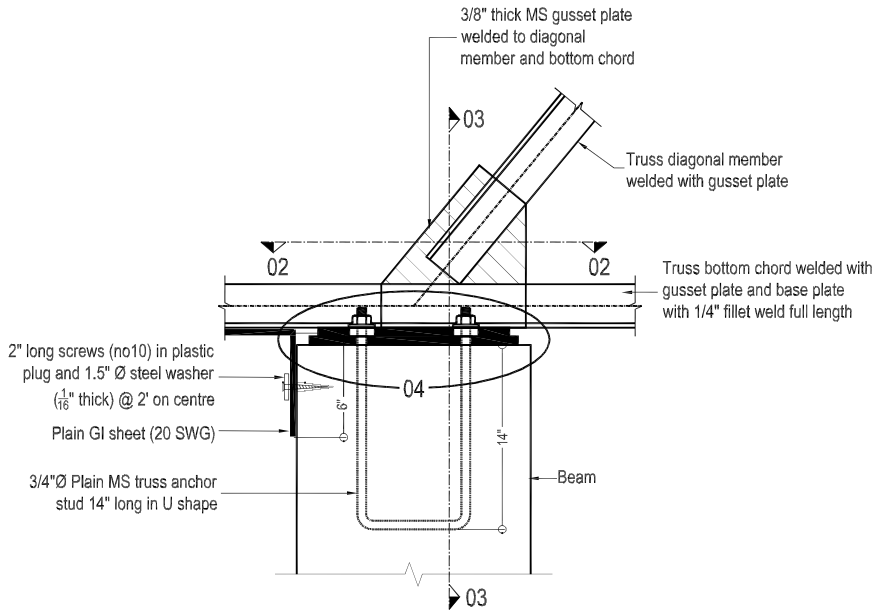

BASE PLATE DETAIL

(All trusses)

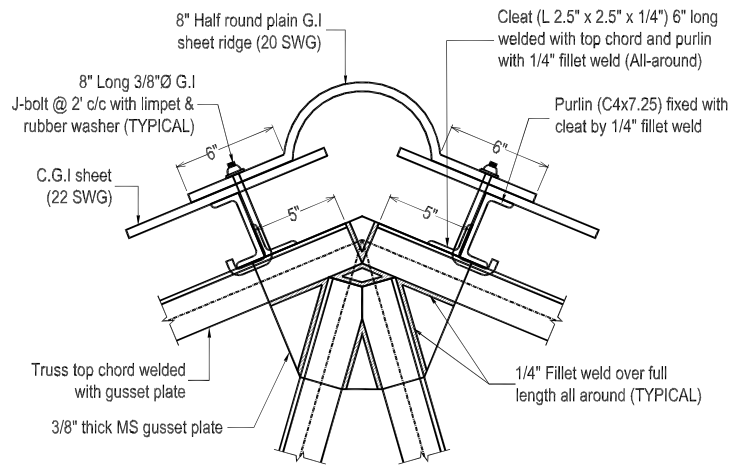

TYPICAL TOP CHORD CONNECTION DETAIL

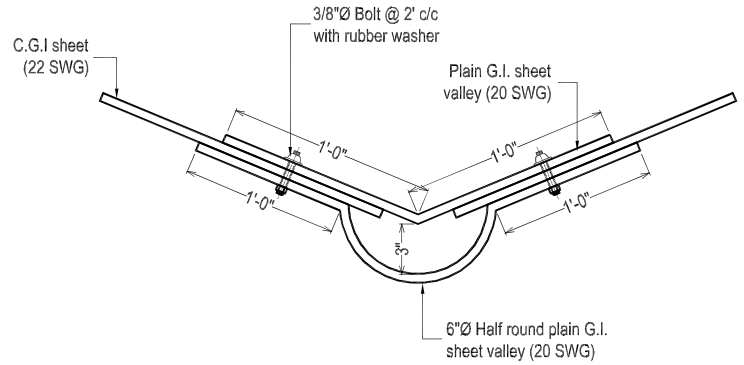

VALLEY DETAIL

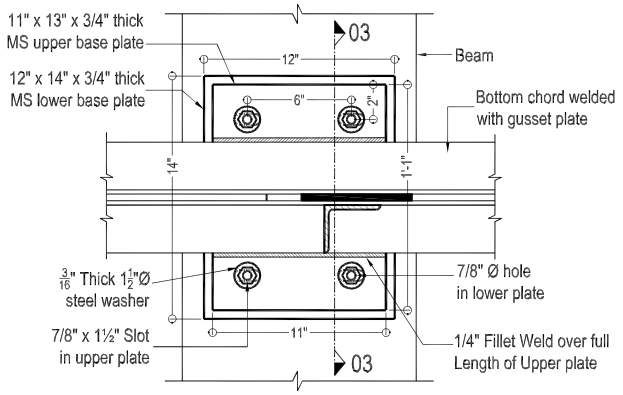

SECTION 02-02

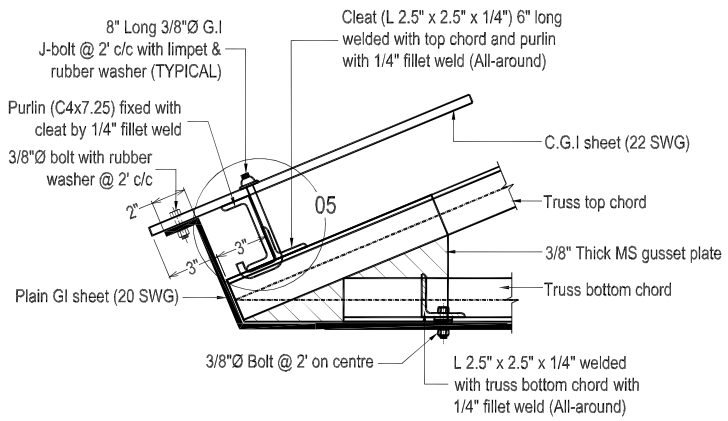

END OF TRUSS PORTION (Elevation)

(All trusses)

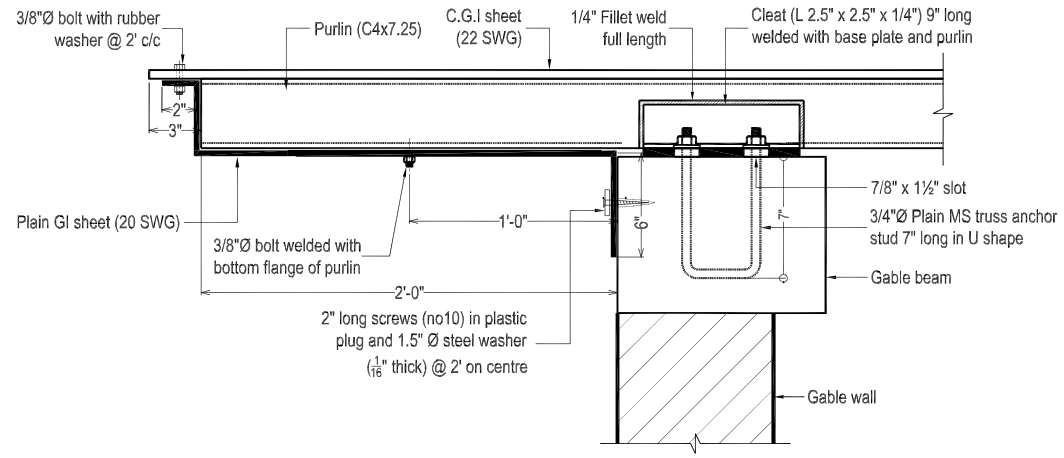

PGI SHEET DETAIL AT GABLE WALL

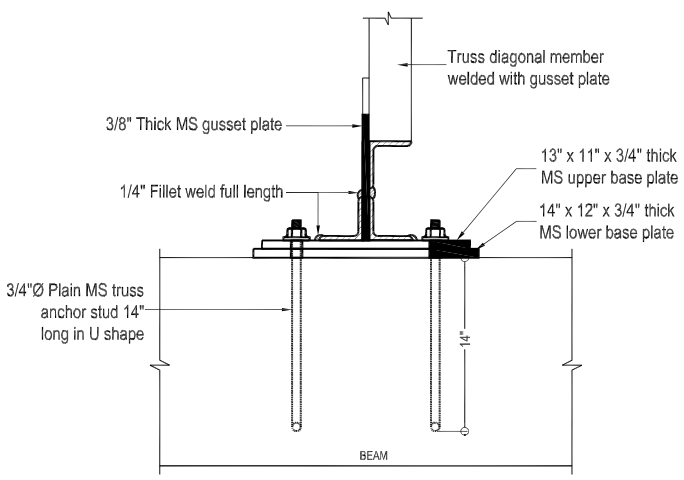

SECTION 03-03

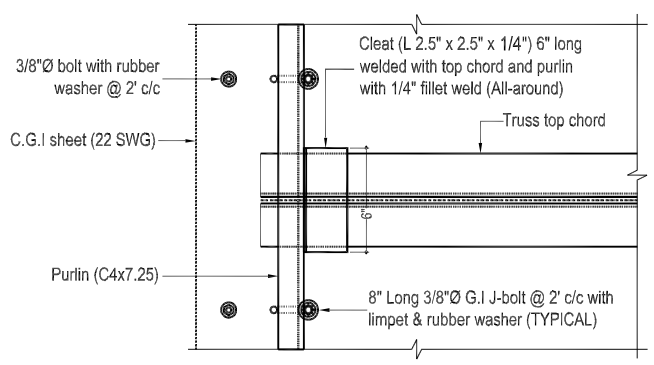

END OF TRUSS PORTION (Plan)

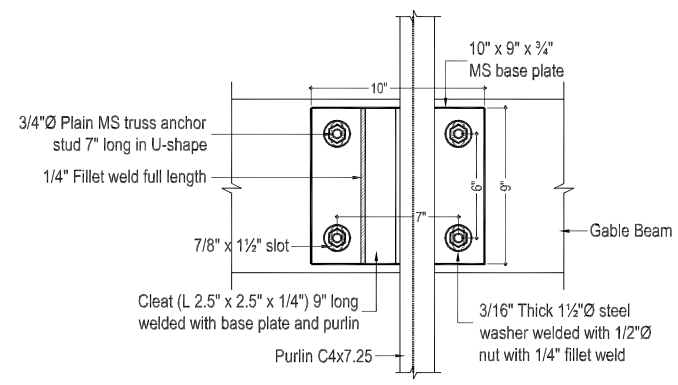

CONNECTION DETAIL
FOR PURLIN ON GABLE WALL

ENT: **KHYBER PAKHTUNKHWA INTEGRATED TOURISM AND ENTERPRISE DEVELOPMENT PROJECT PMU (KITE) C&W DEPARTMENT KP**	CONSULTANT: NATIONAL ENGINEERING SERVICES PAKISTAN (PVT.) LTD.					DRAWN	PROJECT: **REHABILITATION AND REMODELING OF MANKIAL BADA SARAI ROAD IN DISTRICT SWAT - 22 KM LOT-01: KM 0+000 ~ 09+300**	TITLE: REST AREA (TUCK SHOP) TRUSS DETAIL
					SUBMITTED			
					RECOMMNED			
					CHD./VER			DATE: JANUARY 2022 / DWG. NO 38164/102/TD/ RA/LOT-01/13
		REV	DATE	DESCRIPTION	APPROVED			

R.c.c columns upto DPC level .
At DPC 9" thick tie beam will be provided over 9" thick brick walls, no extra DPC then required.After Providing Tie beam 9"X9" on walls & columns at shown position.
Normal 9" thick brick wall is provided.

NOTES:-

(1) ALL REINFORCING STEEL IS DEFORMED AS PER ASTM A-615 40000 PSI MIN. YIELD STRENGTH. AND MIN. ULTIMATE STRENGTH OF 65000 PSI .
(2) ALL CONCRETE IS 3000 PSI CYLINDER STRENGTH AT 28 DAYS WITH MIN. CEMENT CONTENT 400 KG/m
(3) CLEAR CONCRETE COVER TO MAIN REINFORCING BARS IS AS BELOW.
SLABS = 3/4" FOOTING ON 1:4:8 = 2"
BEAMS = 1½" COLUMNS = 1½"
(4) ALL DRAWINGS SHOULD BE READ IN CONJUNCTION WITH THE RELEVENT ARCHITECTURAL AND SERVICES DRGS.
(5) LEAN IS 1000 PSI CYLINDER STRENGTH AT 28 DAYS MIN MIX 1:4:8
(6) ALL LAPS ARE 30 TIMES BAR DIAMETER FOR VERTICAL & 42 D FOR HOR.
(7) EXCAVATION INCLUDING DEWATERING, BRACING OF EXCAVATION TO SAFEGUARD THE ADJOINING PROPERTY AND LIFE AND DEWATERING PITS IN CASE OF RAIN IS CONTRACTOR RESPONSIBILITY. FOR THAT MATTER, A QUALIFIED GEO-TECHNICAL ENGINEER SHOULD BE APPOINTED ON HIS ROLE.
(8) (a) IST TIE BEAM AT FOUNDATION LEVEL.
(b) 2ND TIE BEAM AT D.P.C. LEVEL.
(C) 3RD TIE BEAM AT WINDOW LINTLE LEVEL.
(d) R.C.C COLUMN 9"x 9" AT CORNER OF BUILDING SHAULD BE PROVIDED.

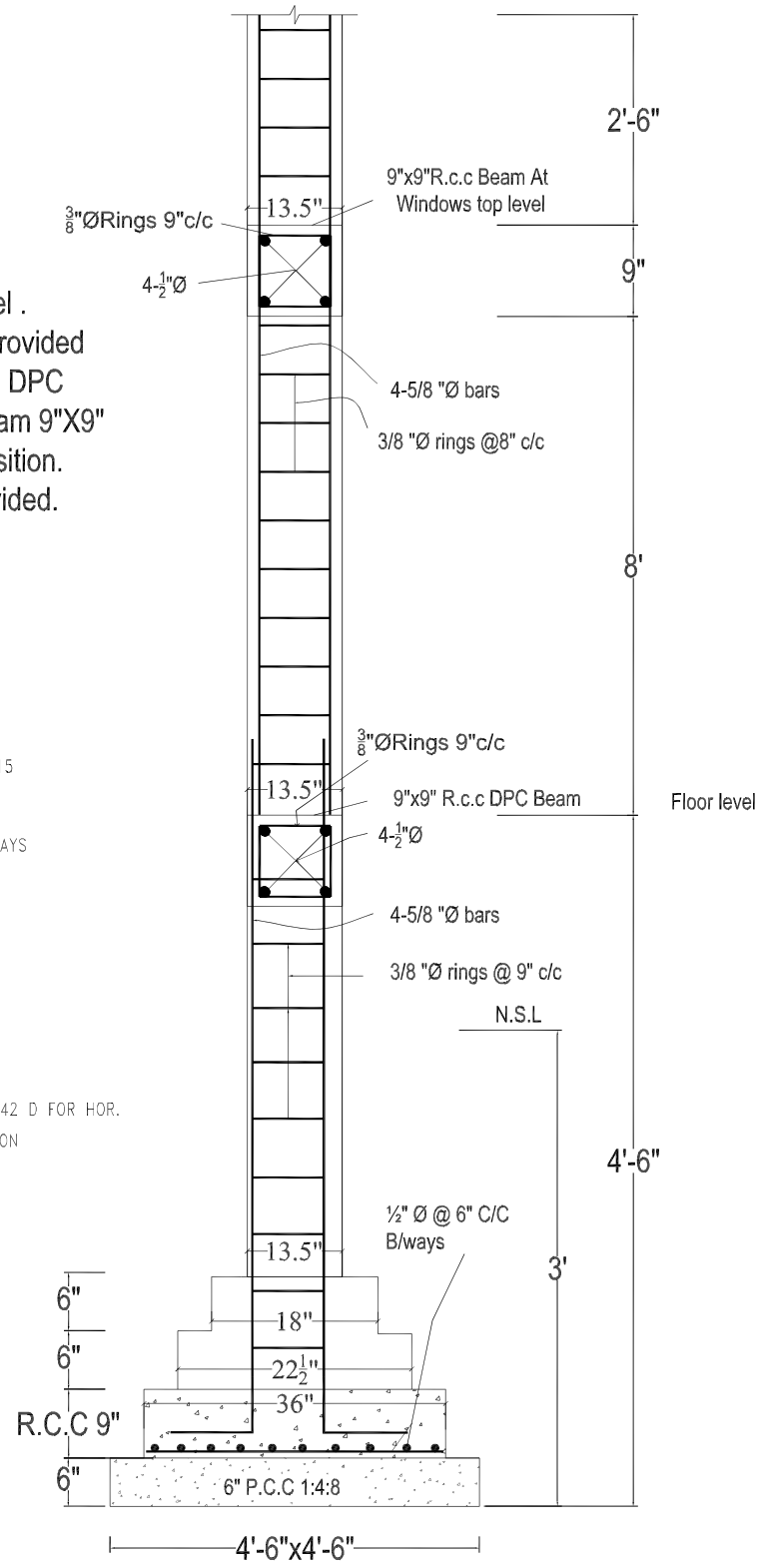

R.c.c Foundation Detail
For R.c.c Column Portion

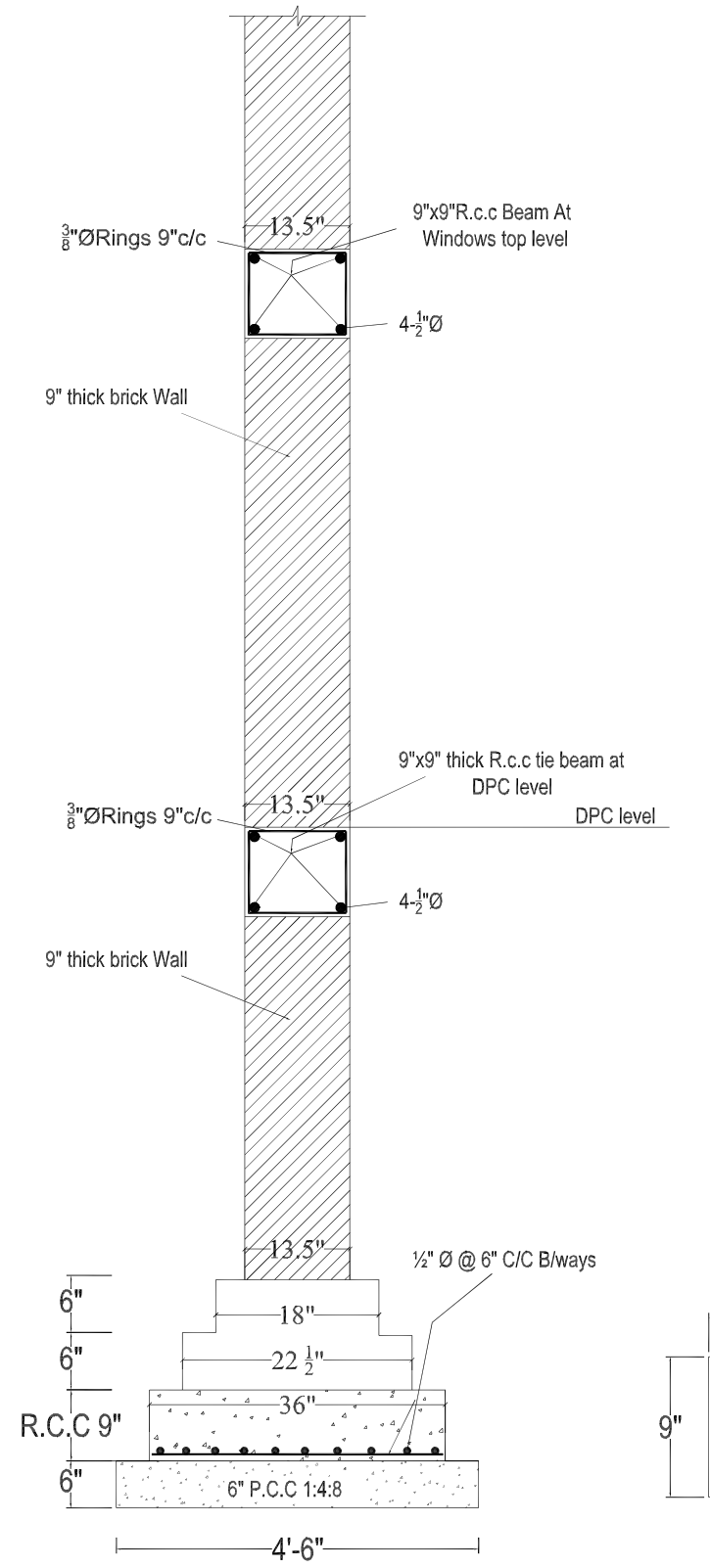

R.C.C. STRIP FOUNDATION
FOR GROUND FLOOR

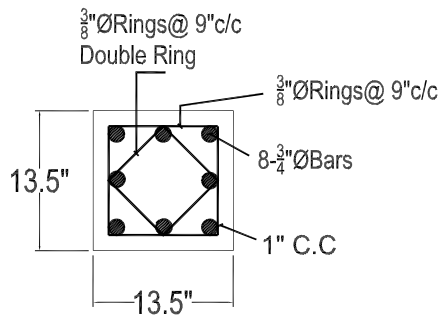

VERANDAH COLUMN DETAIL
C-2

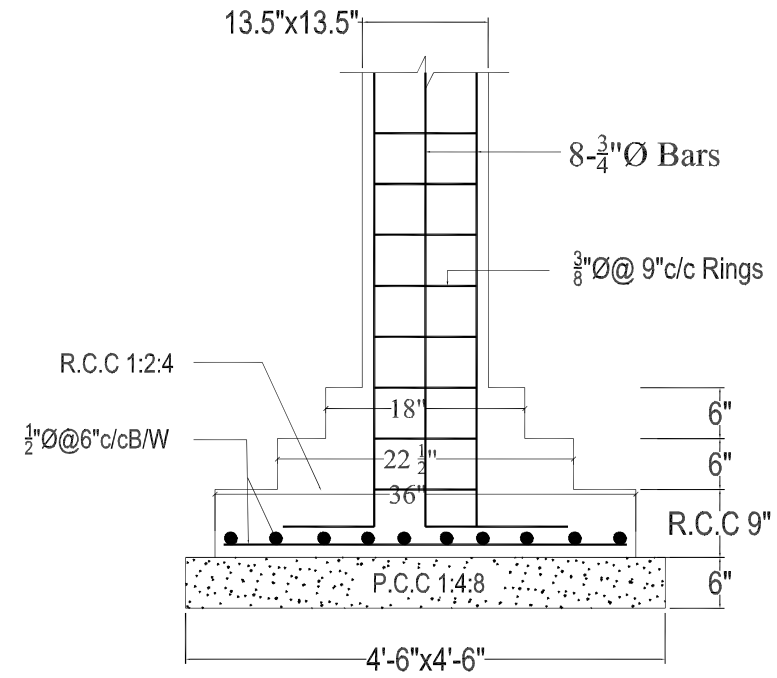

VERANDAH COLUMNS FOUNDATION DETAIL
C-1

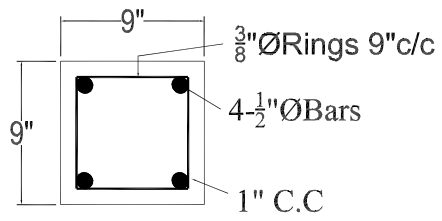

TIE BEAM

CLIENT:	CONSULTANT:					DRAWN	PROJECT:	TITLE: REST AREA (TUCK SHOP) FOUNDATION, COLUMNS AND WALLS DETAIL
KHYBER PAKHTUNKHWA INTEGRATED TOURISM AND ENTERPRISE DEVELOPMENT PROJECT PMU (KITE) C&W DEPARTMENT KP	NATIONAL ENGINEERING SERVICES PAKISTAN (PVT.) LTD.				SUBMITTED		REHABILITATION AND REMODELING OF MANKIAL BADA SARAI ROAD IN DISTRICT SWAT - 22 KM LOT-01: KM 0+000 ~ 09+300	DATE: JANUARY 2022 / DWG. NO 38164/102/TD/ RA/LOT-01/14
					RECOMMNED			
					CHD./VER			
		REV	DATE	DESCRIPTION	APPROVED			

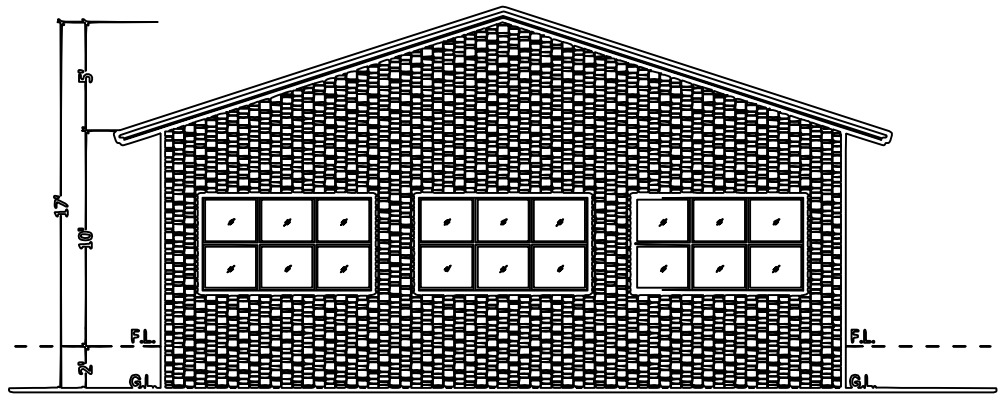

FRONT ELEVATION

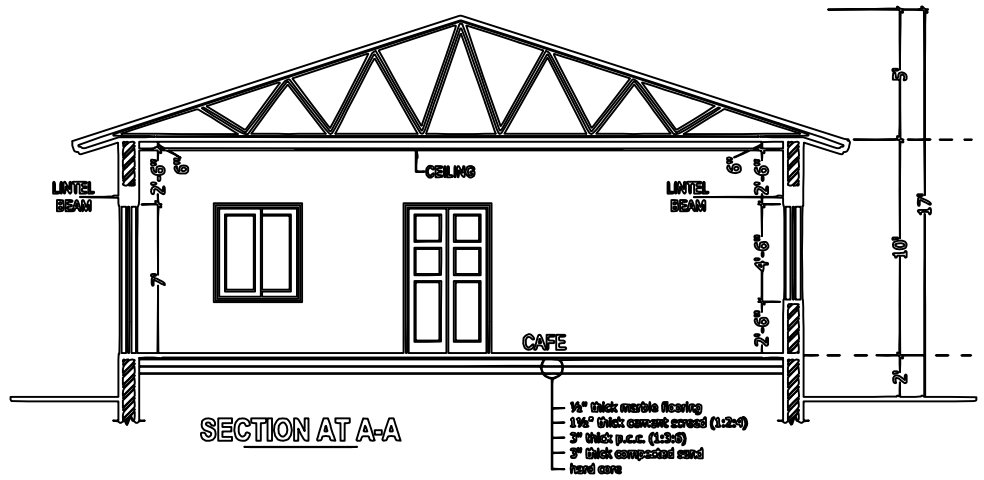

SECTION AT A-A

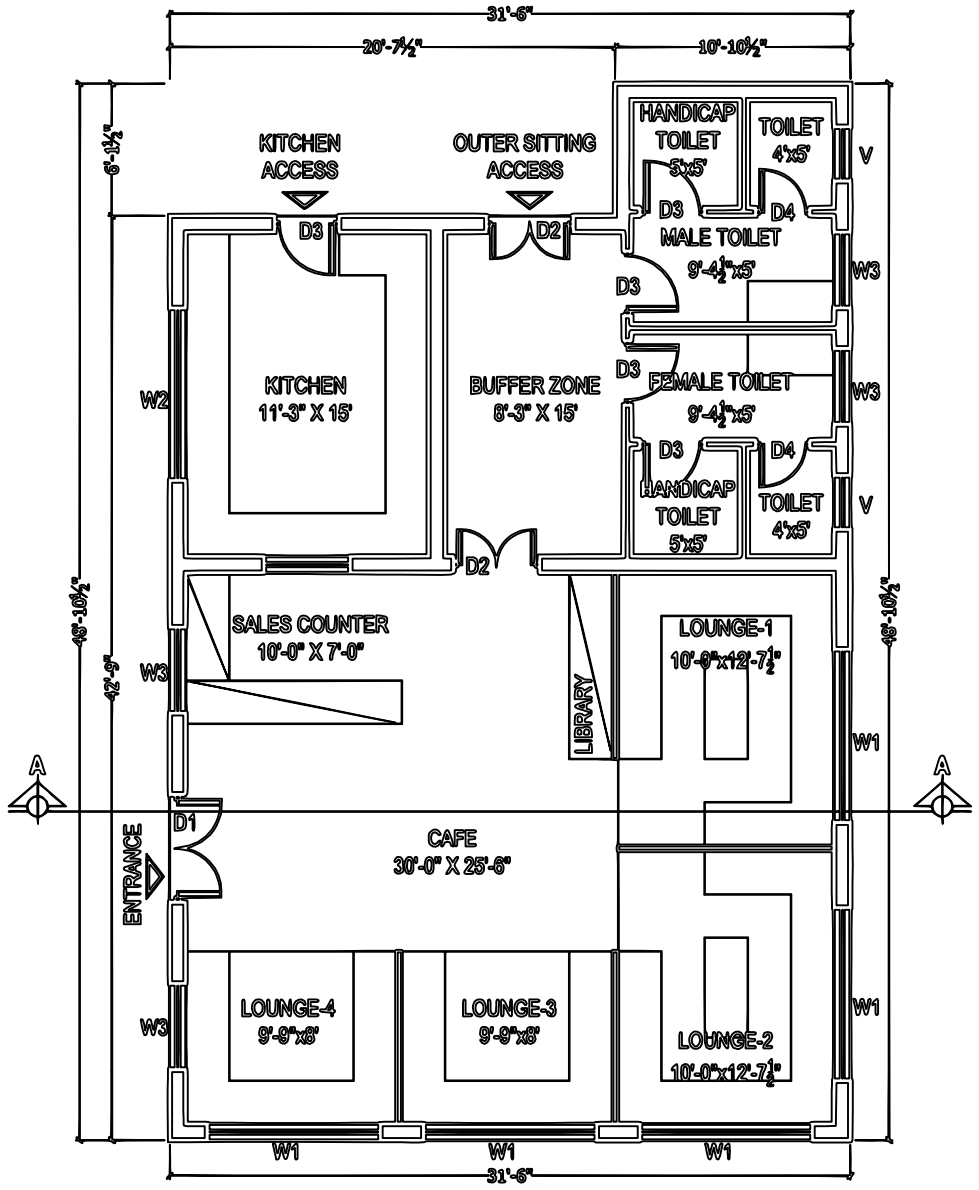

CAFE / KHAWA KHANA

COVERED AREA = 1415 SFT.

SCHEDULE OF OPENING			
S.NO.	TYPE	SIZE	S/LEVEL
01	D1	5'-0" X 7'-0"	±0'-0"
02	D1	4'-0" X 7'-0"	±0'-0"
03	D2	3'-0" X 7'-0"	±0'-0"
04	D3	2'-6" X 7'-0"	±0'-0"
05	W1	6'-0" X 4'-6"	+2'-6"
06	W2	6'-0" X 4'-0"	+3'-0"
07	W3	3'-6" X 4'-6"	+2'-6"
08	V	2'-0" X 2'-0"	+5'-0"

BUILDING SPECIFICATION

* PCC (1:4:8) IN FOUNDATIONS.
* 2" THICK DPC (DAMP PROOF COURSE) IN (1:2:4) PCC WITH 2 COATS OF HOT BITUMEN WITH POLYTHENE SHEET.
* BURNT BRICK MASONRY IN 1:6 CEMENT SAND RATIO MORTAR.
* 1/2" THICK PLASTER ON WALLS IN 1:6 CEMENT SAND RATIO.
* ALL LINTELS & BEAMS IN (1:2:4) CEMENT: SAND: AGGREGATE RATIO WITH 14 DAYS CURING.
* ALL ELECTRICAL WIRING TO BE CONCEALED.
* ALL LOAD BEARING WALLS SHALL BE MINIMUM 9" THICK.
* ALL PARTITION WALLS SHALL BE 9" THICK.
* THEN 1 1/2" BRICK TILES SET IN 1:3 CEMENT SAND RATIO.
* ALL INTER FLOOR SLABS SHALL BE COVERED WITH 2" OF PCC (1:4:8) IN SLOPE THEN 24" X 24" IMPORTED CERAMIC TILES AS APPROVED BY THE ENGINEER.
* ALL GROUND FLOORS SHALL BE LAID ON COMPACTED EARTH THEN 6" OF WATERED AND RAMMED SAND THEN 4" OF (1:4:8) IN SLOPE THEN 2" (1:2:4) THEN 24" X 24" IMPORTED CERAMIC TILES AS APPROVED BY THE ENGINEER.

CLIENT:	CONSULTANT:					DRAWN	PROJECT:	TITLE:
KHYBER PAKHTUNKHWA INTEGRATED TOURISM AND ENTERPRISE DEVELOPMENT PROJECT PMU (KITE) C&W DEPARTMENT KP	NATIONAL ENGINEERING SERVICES PAKISTAN (PVT.) LTD.				SUBMITTED		REHABILITATION AND REMODELING OF MANKIAL BADA SARAI ROAD IN DISTRICT SWAT - 22 KM LOT-01: KM 0+000 ~ 09+300	REST AREA (CAFE / KEHWA KHANA) PLAN, ELEVATION, SECTION, SPECIFICATION
					RECOMMNED			
					CHD./VER			DATE: JANUARY 2022 / DWG. NO 38164/102/TD/ RA/LOT-01/15
		REV	DATE	DESCRIPTION	APPROVED			

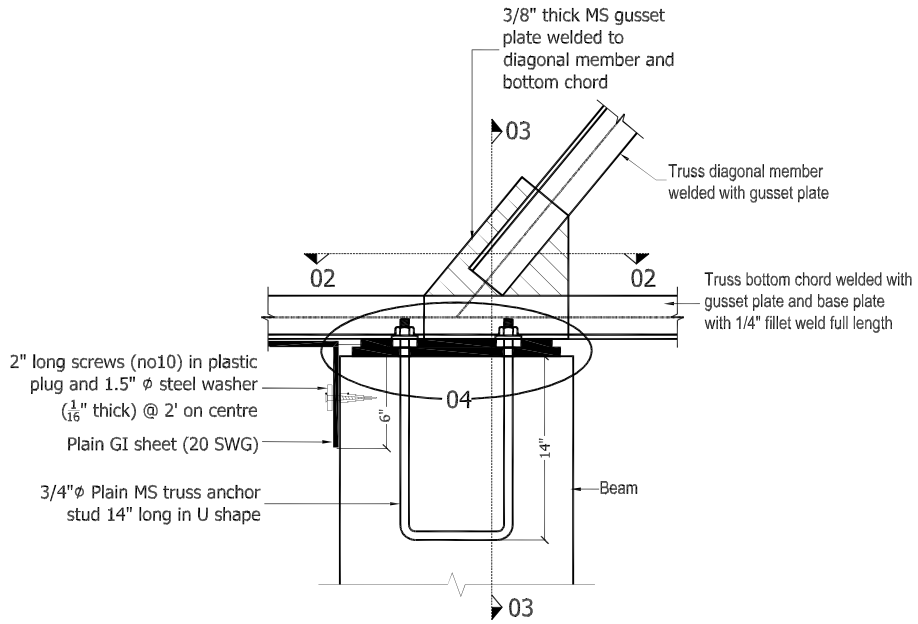

BASE PLATE DETAIL

(All trusses)

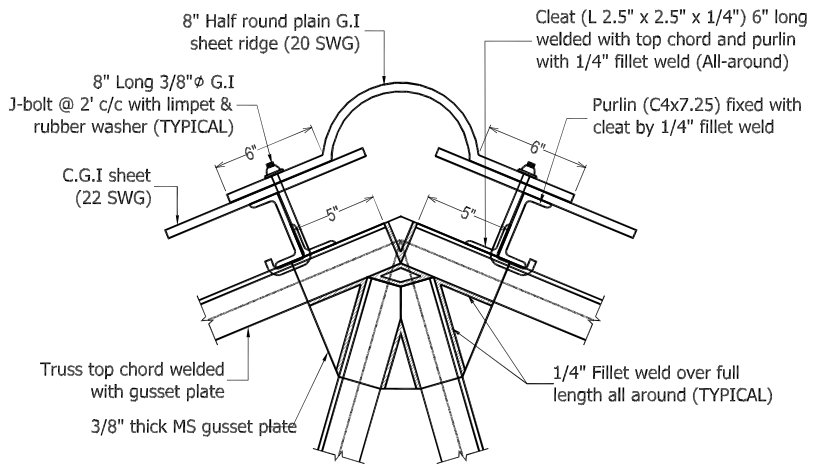

TYPICAL TOP CHORD CONNECTION DETAIL

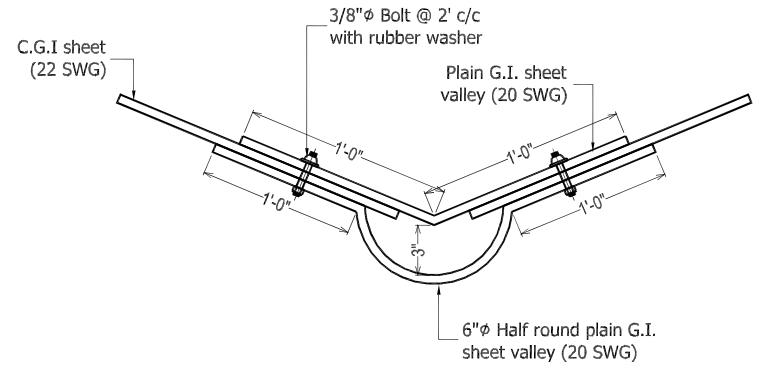

VALLEY DETAIL

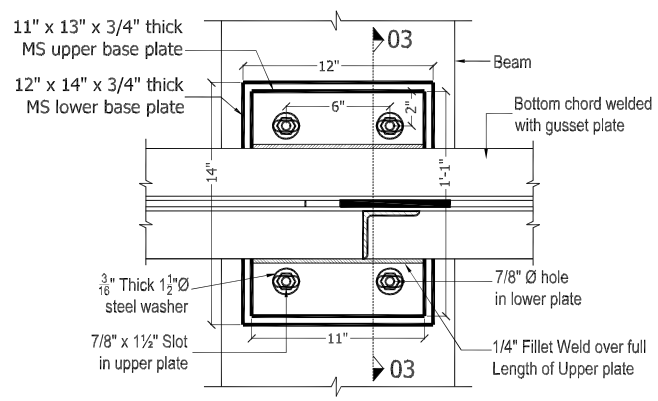

SECTION 02-02

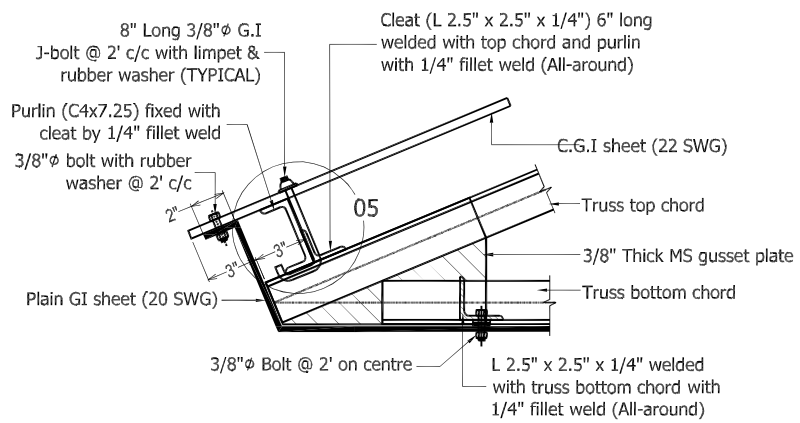

END OF TRUSS PORTION (Elevation)

(All trusses)

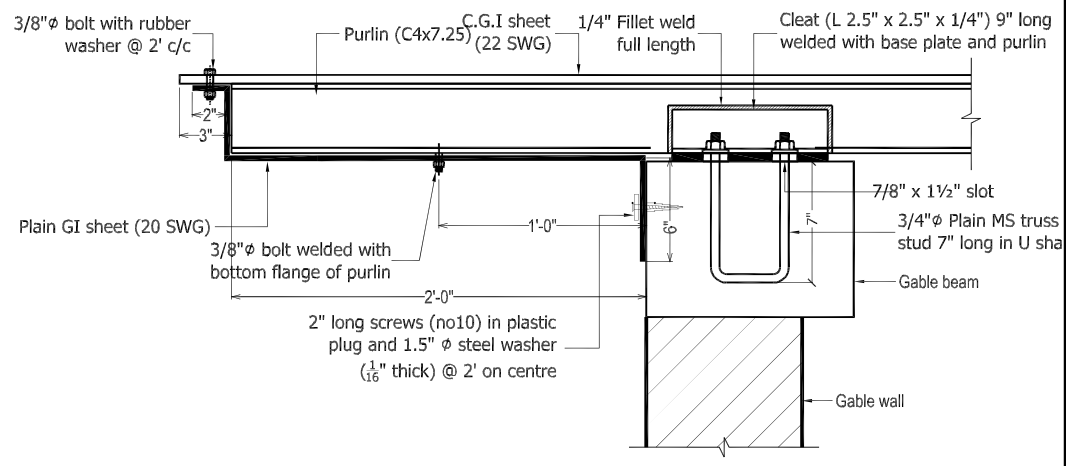

PGI SHEET DETAIL AT GABLE WALL

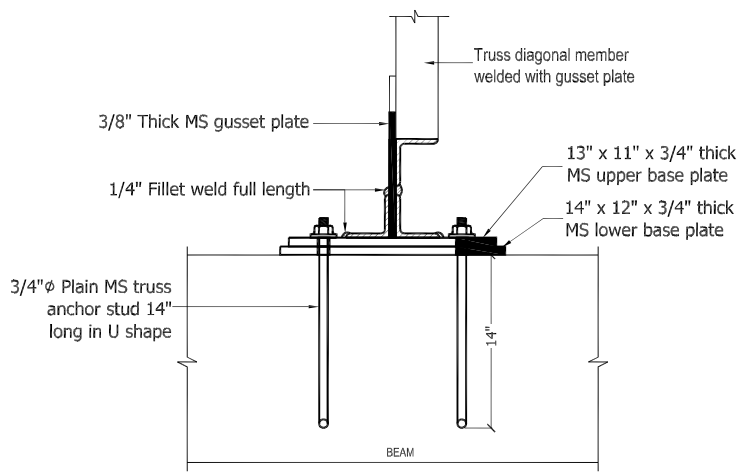

SECTION 03-03

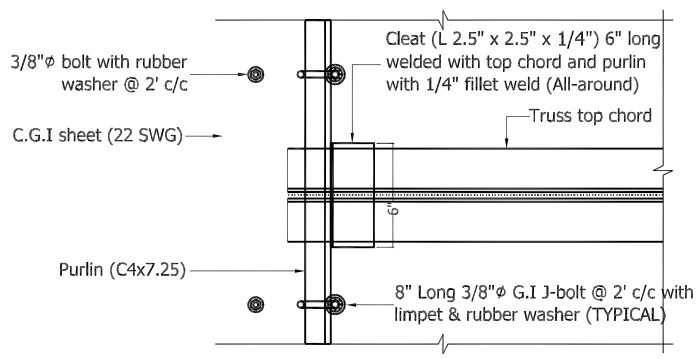

END OF TRUSS PORTION (Plan)

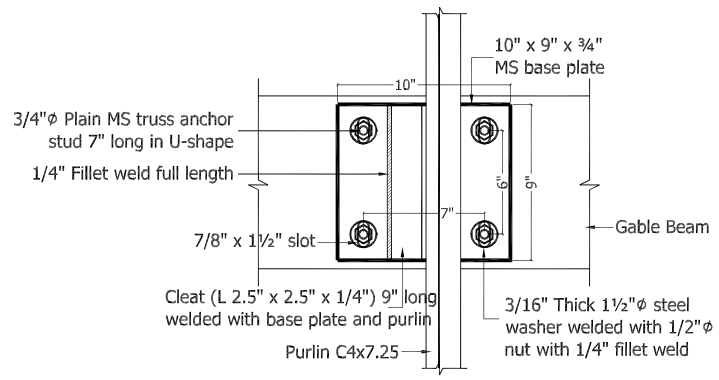

CONNECTION DETAIL
FOR PURLIN ON GABLE WALL

CLIENT:	CONSULTANT:					DRAWN	PROJECT:	TITLE:
KHYBER PAKHTUNKHWA INTEGRATED TOURISM AND ENTERPRISE DEVELOPMENT PROJECT **PMU (KITE) C&W DEPARTMENT KP**	NATIONAL ENGINEERING SERVICES PAKISTAN (PVT.) LTD.				SUBMITTED		**REHABILITATION AND REMODELING OF MANKIAL BADA SARAI ROAD IN DISTRICT SWAT - 22 KM** **LOT-01: KM 0+000 ~ 09+300**	REST AREA (CAFE/ KEHWA KHANA) TRUSS DETAIL
					RECOMMNED			DATE: JANUARY 2022 / DWG. NO 38164/102/TD/ RA/LOT-01/16
					CHD./VER			
		REV	DATE	DESCRIPTION	APPROVED			

R.c.c columns upto DPC level .
At DPC 9" thick tie beam will be provided over 9" thick brick walls, no extra DPC then required.After Providing Tie beam 9"X9" on walls & columns at shown position.
Normal 9" thick brick wall is provided.

NOTES:-

(1) ALL REINFORCING STEEL IS DEFORMED AS PER ASTM A-615 40000 PSI MIN. YIELD STRENGTH. AND MIN. ULTIMATE STRENGTH OF 65000 PSI .
(2) ALL CONCRETE IS 3000 PSI CYLINDER STRENGTH AT 28 DAYS WITH MIN. CEMENT CONTENT 400 KG/m
(3) CLEAR CONCRETE COVER TO MAIN REINFORCING BARS IS AS BELOW.
SLABS = 3/4" FOOTING ON 1:4:8 = 2"
BEAMS = 1½" COLUMNS = 1½"
(4) ALL DRAWINGS SHOULD BE READ IN CONJUNCTION WITH THE RELEVENT ARCHITECTURAL AND SERVICES DRGS.
(5) LEAN IS 1000 PSI CYLINDER STRENGTH AT 28 DAYS MIN MIX 1:4:8
(6) ALL LAPS ARE 30 TIMES BAR DIAMETER FOR VERTICAL & 42 D FOR HOR.
(7) EXCAVATION INCLUDING DEWATERING, BRACING OF EXCAVATION TO SAFEGUARD THE ADJOINING PROPERTY AND LIFE AND DEWATERING PITS IN CASE OF RAIN IS CONTRACTOR RESPONSIBILITY. FOR THAT MATTER, A QUALIFIED GEO-TECHNICAL ENGINEER SHOULD BE APPOINTED ON HIS ROLE.
(8) (a) IST TIE BEAM AT FOUNDATION LEVEL.
(b) 2ND TIE BEAM AT D.P.C. LEVEL.
(C) 3RD TIE BEAM AT WINDOW LINTLE LEVEL.
(d) R.C.C COLUMN 9"x 9" AT CORNER OF BUILDING SHAULD BE PROVIDED.

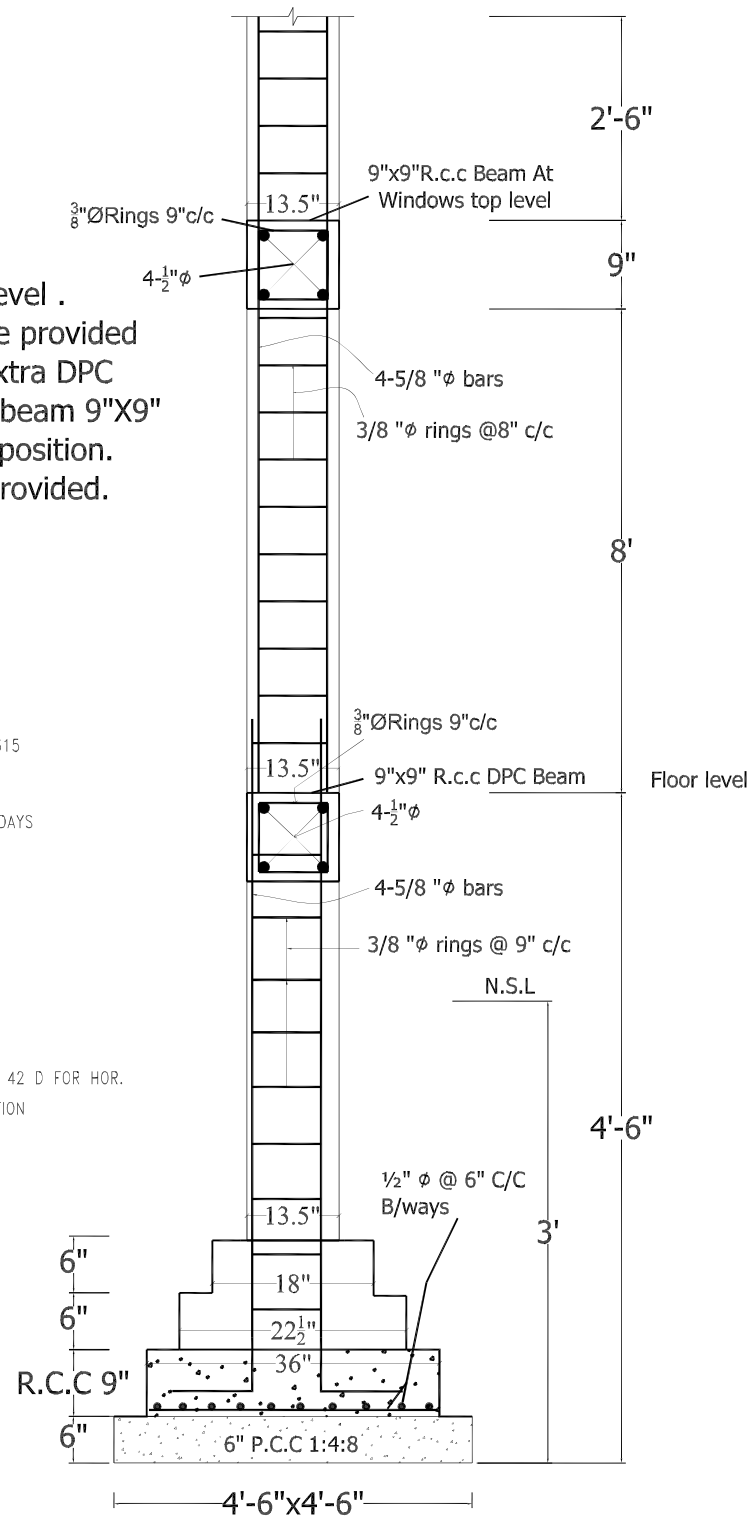

R.c.c Foundation Detail
For R.c.c Column Portion

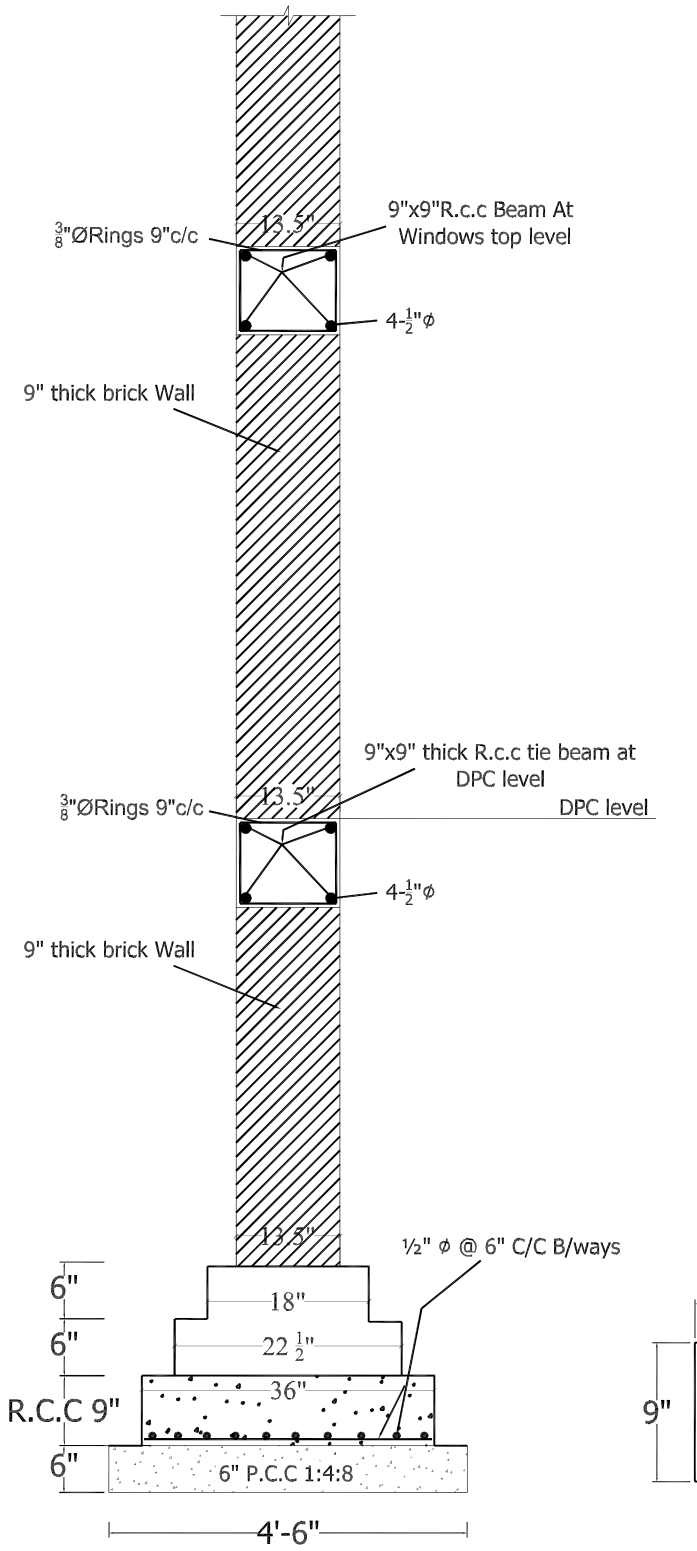

R.C.C. STRIP FOUNDATION
FOR GROUND FLOOR

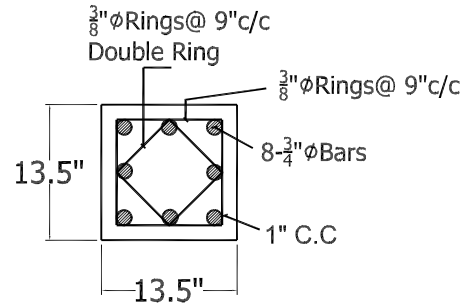

VERANDAH COLUMN DETAIL
C-2

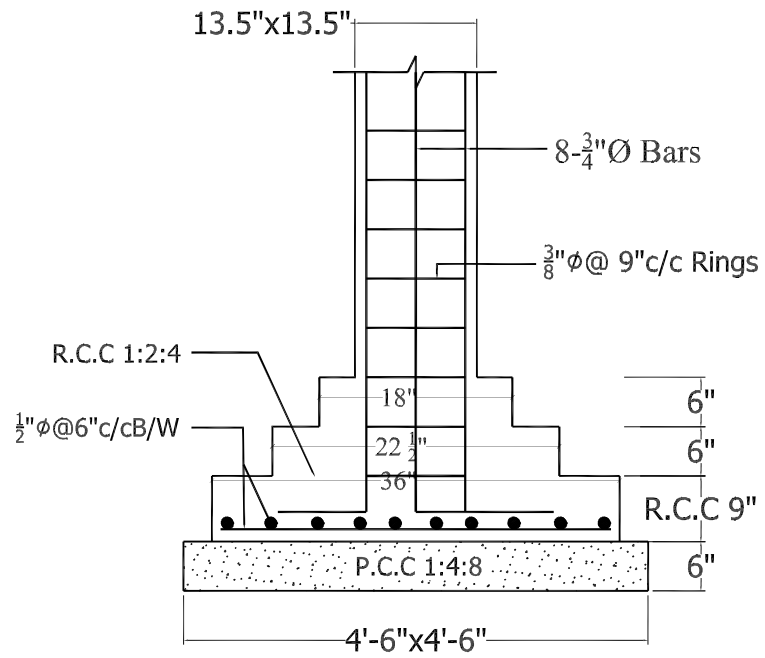

VERANDAH COLUMNS FOUNDATION DETAIL
C-1

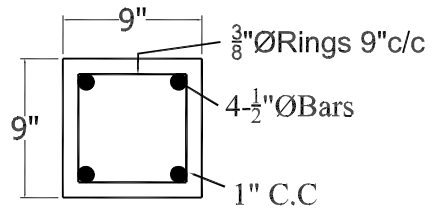

TIE BEAM

CLIENT:	CONSULTANT:					DRAWN	PROJECT:	TITLE:
KHYBER PAKHTUNKHWA INTEGRATED TOURISM AND ENTERPRISE DEVELOPMENT PROJECT PMU (KITE) C&W DEPARTMENT KP	NATIONAL ENGINEERING SERVICES PAKISTAN (PVT.) LTD.				SUBMITTED		REHABILITATION AND REMODELING OF MANKIAL BADA SARAI ROAD IN DISTRICT SWAT - 22 KM LOT-01: KM 0+000 ~ 09+300	REST AREA (CAFE/ KEHWA KHANA) FOUNDATION, COLUMNS AND WALLS DETAIL
					RECOMMNED			
					CHD./VER			DATE: JANUARY 2022 / DWG. NO 38164/102/TD/ RA/LOT-01/17
		REV	DATE	DESCRIPTION	APPROVED			

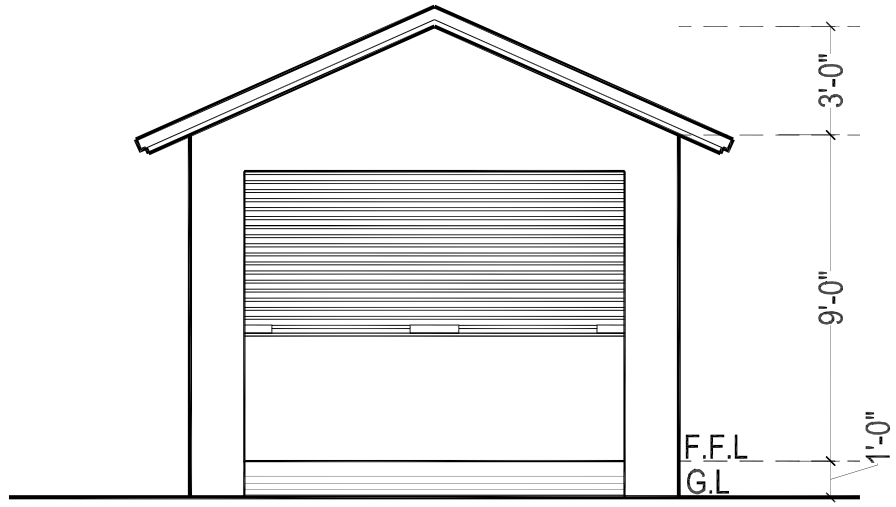

FRONT ELEVATION

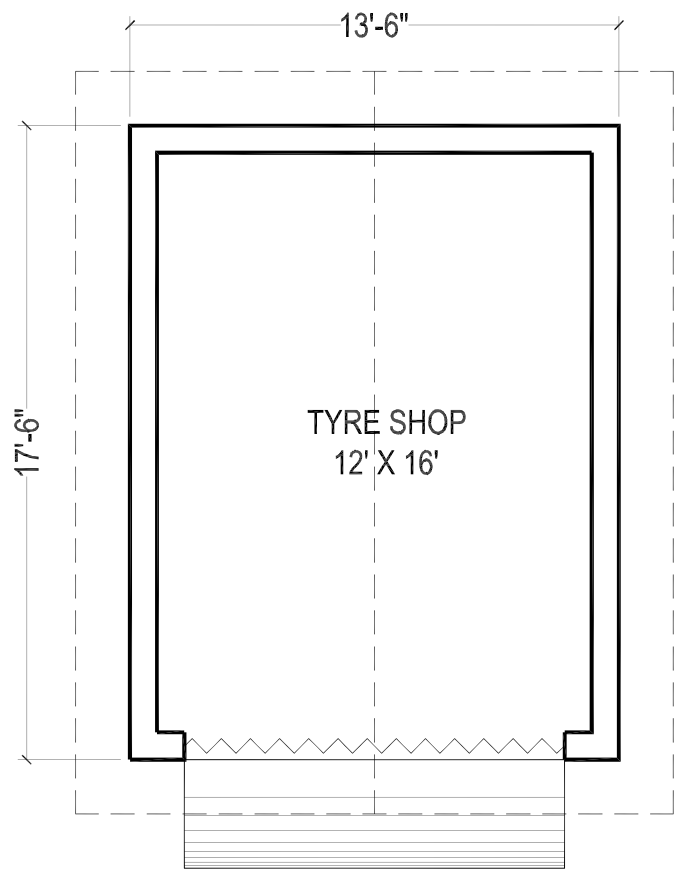

TYRE SHOP

COVERED AREA = 236 SFT

BUILDING SPECIFICATION

* PCC (1:4:8) IN FOUNDATIONS.
* 2" THICK DPC (DAMP PROOF COURSE) IN (1:2:4) PCC WITH 2 COATS OF HOT BITUMEN WITH POLYTHENE SHEET.
* BURNT BRICK MASONRY IN 1:6 CEMENT SAND RATIO MORTAR.
* 1/2" THICK PLASTER ON WALLS IN 1:6 CEMENT SAND RATIO.
* ALL LINTELS & BEAMS IN (1:2:4) CEMENT: SAND: AGGREGATE RATIO WITH 14 DAYS CURING.
* ALL ELECTRICAL WIRING TO BE CONCEALED.
* ALL LOAD BEARING WALLS SHALL BE MINIMUM 9" THICK.
* ALL PARTITION WALLS SHALL BE 9" THICK.
* THEN 1 1/2" BRICK TILES SET IN 1:3 CEMENT SAND RATIO.
* ALL INTER FLOOR SLABS SHALL BE COVERED WITH 2" OF PCC (1:4:8) IN SLOPE THEN 24" X 24" IMPORTED CERAMIC TILES AS APPROVED BY THE ENGINEER.
* ALL GROUND FLOORS SHALL BE LAID ON COMPACTED EARTH THEN 6" OF WATERED AND RAMMED SAND THEN 4" OF (1:4:8) IN SLOPE THEN 2" (1:2:4) THEN 24" X 24" IMPORTED CERAMIC TILES AS APPROVED BY THE ENGINEER.

CLIENT:	CONSULTANT:					DRAWN	PROJECT:	TITLE:
KHYBER PAKHTUNKHWA INTEGRATED TOURISM AND ENTERPRISE DEVELOPMENT PROJECT PMU (KITE) C&W DEPARTMENT KP	NATIONAL ENGINEERING SERVICES PAKISTAN (PVT.) LTD.				SUBMITTED		REHABILITATION AND REMODELING OF MANKIAL BADA SARAI ROAD IN DISTRICT SWAT - 22 KM LOT-01: KM 0+000 ~ 09+300	REST AREA (TYRE SHOP) PLAN, ELEVATION,SPECIFICATION
					RECOMMNED			
					CHD./VER			DATE: JANUARY 2022 / DWG. NO 38164/102/TD/ RA/LOT-01/18
		REV	DATE	DESCRIPTION	APPROVED			

GOVERNMENT OF KHYBER PAKHTUNKHWA
C & W DEPARTMENT

REHABILITATION AND REMODELING OF MANKIAL BADA SARAI ROAD IN DISTRICT SWAT (22 KM)
LOT-01: KM 0+000 ~ 09+300

TENDER DRAWINGS

JANUARY 2022

NATIONAL ENGINEERING SERVICES PAKISTAN (PVT.) LIMITED.
NESPAK HOUSE 2nd Floor Attaturk Avenue, Sector G-5/2 Islamabad- Pakistan.

LIST OF DRAWINGS

Sr.No.	TITLE OF DRAWING	DRAWING No.	TOTAL NO OF SHEETS
1	LIST OF DRAWINGS AND GENERAL NOTES	38164/102/TD/LDG001	01
2	KEY MAP	38164/102/TD/KM002	01
3	SYMBOLS AND ABBREVIATIONS	38164/102/TD/SA002A	01
4	ROUTE LOCATION PLAN	38164/102/TD/RLP 01~16	16
5	TYPICAL CROSS SECTIONS	38164/102/TD/TS001	01
6	SCHEDULE OF STRUCTURES	38164/102/TD/SS003,004	02
7	TRAVERSE STATION DATA	38164/102/TD/TS005	01
8	SLAB CULVERT DETAILS (SINGLE CELL)	38164/102/TD/SC007	01
9	TYPICAL CULVERT DETAILS (MULTI CELL)	38164/102/TD/SC008	01
10	TYPICAL SLAB CULVERT REINFORCEMENT DETAILS	38164/102/TD/SC009	01
11	SUPERELEVATION SCHEME ROAD -1	4169/102/TD/SS001~006	06
12	SUPERELEVATION SCHEME ROAD -2	4169/102/TD/SS001~006	06
13	TYPICAL STONE MASONRY RETAINING WALL DETAILS	38164/102/TD/RW011	01
14	GENERAL NOTES FOR STRUCTURES	38164/102/TD/GNS0012	01
15	REBAR SHAPE CODE	38164/102/TD/RS0013	01
16	STRUCTURES DRAWINGS	38164/102/TD/P1G001,002,003	03
17	MISCELLANEOUS PROTECTION DETAIL	38164/102/TD/0014	01
18	TYPICAL DRAIN DETAIL	38164/102/TD/D0015	01
19	TYP DETAIL OF SERVICE DUCTS	38164/102/TD/D0016	01
20	TYPICAL RCC CAUSEWAY DETAILS	38164/102/TD/0017	01
21	TYPICAL SUPERELEVATION DETAILS	38164/102/TD/TS0018	01
22	TYPICAL ROAD SIGN DETAILS	38164/102/TD/RS0019~28	09
23	PAVEMENT MARKING AND ROAD STUDS	38164/102/TD/PMS0029	01
24	METAL GUARD RAIL	38164/102/TD/GR030,031	02
25	DETAIL PLAN & PROFILE DRAWINGS	4169/102/TD/PL&PR 001~032	32

GENERAL NOTES

1. ALL DIMENSIONS SHOWN ON PLAN AND PROFILE DRAWINGS ARE IN METERS WHEREAS ANGULAR MEASUREMENTS ARE IN DEGREES, MINUTES AND SECONDS (360° TO A CIRCLE).
2. EACH DRAWING SHALL BE READ IN CONJUNCTION WITH OTHER DRAWINGS.
3. GRID CO-ORDINATES AND ELEVATIONS ARE BASED ON UTM ZONE 42-N.
4. MINOR CHANGES IN HORIZONTAL/VERTICAL ALIGNMENT MAY BE CARRIED OUT AT SITE WITH PRIOR APPROVAL OF THE ENGINEER.
5. STRUCTURES SHOWN ON PLAN/PROFILE ARE SYMBOLIC. FOR DETAIL OF STRUCTURES AND PROTECTION WORKS SEE RELEVANT DRAWING. HOWEVER DETAILED INVENTORY OF STRUCTURES SHALL BE PREPARED AS PER SITE CONDITION/REQUIREMENTS AND SUBMITTED TO THE ENGINEER FOR APPROVAL PRIOR TO COMMENCEMENT OF CONSTRACTION ACTIVITES AT SITE.
6. FOR PAVEMENT MARKING AND ROAD SIGNS, CONTRACTOR SHALL SUBMIT DETAILED PLANS DRAWINGS FOR APPROVAL OF THE ENGINEER.
7. LOCATION OF UNDER GROUND CABLES/UTILITIES SHOWN ON PLANS ARE APPROXIMATE. EXACT LOCATION SHALL BE DETERMINED BY THE CONTRACTOR AT HIS OWN COST.
8. ANY DAMAGE DONE TO THE UTILITIES DURING EXCAVATION/EXECUTION OF WORKS SHALL BE IMMEDIATELY REPAIRED BY THE CONTRACTOR AT HIS OWN COST TO THE SATISFACTION OF CONCERNED DEPARTMENTS.
9. THE SUBGRADE MATERIAL SHALL HAVE A MINIMUM SOAKED C.B.R. OF 30% AT 95% M.D.D. AASHTO T-180 FOR BOTH FILL AND CUT SECTIONS.
10. THE LENGTHS, SIZES, SLOPES, INVERT LEVELS AND OTHERS GIVEN DETAILS REGARDING CULVERTS, AS SHOWN IN SCHEDULE OF STRUCTURES ARE TENTATIVE. THE CONTRACTOR SHALL PREPARE SHOP DRAWINGS OF EACH CULVERT LOCATIONS WITH THE REQUIRED SKEW ANGLE AS PER SITE REQUIREMENTS AND SHALL SUBMIT THE SAME TO THE ENGINEER FOR APPROVAL PRIOR TO CONSTRUCTION EXECUTION.
11. THE CONTRACTOR SHALL BE RESPONSIBLE TO CATER FOR ALL TEMPORARY TRAFFIC DIVERSIONS BEFORE START OF CONSTRUCTION OF THE ROAD TO THE ENTIRE SATISFACTION OF THE ENGINEER INCLUDING DETOUR ROAD IF REQUIRED AND ITS MAINTENANCE, SPRINKLING OF WATER, GRADING AND COMPACTION WHEN AND WHERE REQUIRED AT HIS OWN COST.
12. RETAINING/BREAST/TOE WALL, GUARD RAIL, CONCRETE CURB STONES, FOOTPATH, ROAD SIGNS, GANTRY SIGNS, PAVEMENT STUDS AND OTHER ANCILLARY ITEMS SHALL BE PROVIDED AS PER THE BOQ ITEMS , AS PER SITE REQUIREMENT OR AS DIRECTED BY THE ENGINEER. CONTRACTOR SHALL PREPARE THE SHOP DRAWINGS FOR EACH ACTIVITY/ LOCATION ALONG WITH METHODOLOGY AND SHALL SUBMIT FOR APPROVAL TO THE ENGINEER PRIOR TO START OF CONSTRUCTION.
13. TWO COATS OF BITUMEN PAINT SHALL BE APPLIED ON CONCRETE FACES IN CONTACT WITH THE SOIL. COST OF THIS ITEM IS DEEMED TO BE INCLUDED IN THE RELEVENT BOQ ITEM RATES AND NO SEPERATE PAYMENT SHALL BE MADE FOR THIS ITEM OF WORK.
14. RETAINING/DRAINAGE STRUCTURES FOUNDATION SHALL BE PLACED ON FIRM,HARD AND ROCKY STRATA, OR AS DIRECTED BY ENGINEER.
15. ROADWAY EXCAVATION MATERIAL SHELL BE UTILIZED IN MOST EFFECTIVE MANNER IN THE EMBANKMENT EVEN WITH BLENDING /MIXING WITH THE SUPERIOR MATERIALS (IF REQUIRED, WITHOUT AT ANY EXTRA COST). ROADWAY EXCAVATION SHALL NOT BE DISPOSED OFF OUTSIDE RIGHT OF WAY.
16. NSL PROVIDED IN ROAD PROFILE DRAWING IS GENERATED USING TIN, WHICH MAY HAVE SLIGHT VARIATION FROM ACTUAL NSL AT SITE. PRIOR TO EXECUTION, JOINT CROSS SECTION / ACTUAL NSL OF DESIGN CENTER LINE WILL BE PROVIDED TO M/S NESPAK TO FINALIZE THE ROAD PROFILE PRIOR TO COMMENCE CONSTRUCTION ACTIVITIES AT SITE.

SYMBOLS

DESIGN CENTER LINE

AGRICULTURE LAND

LAND ACQUISITION

TREES

BUSHES

MOSQUE

PERMANENT HOUSE / TEMPORARY

GRAVES / GRAVE YARD

TELEPHONE POLE

ELECTRIC & T&T LINE

DIRT TRACK — D.TRACK

METALLED ROAD

ELECTRIC POLE

HIGH TENSION LINE PYLON

HORIZONTAL CURVE DATA — CH= R= L= Δ= E= N=

GRID NORTH — N

TRAVERSE /BM POINTS — TP

POINT OF INTERSECTION — P.I

FENCE

SUI GAS & WATER PIPE LINE

TUBE WELL

BOUNDARY LINE

MANHOLE

NULLAH

CULVERT / BRIDGE

T&T BOX — T&T

HAND PUMP — HP

CANAL / DRAIN

LINED WATER COURSE

UNLINED WATER COURSE

SPUR STRUCTURE

GRID LINE — N= E=

SPOT LEVEL (TYP.) — 100.00

ROAD SIGN (IN PLAN) — ROAD SIGN NUMBER — 101

EXISTING GROUND LEVEL (PROFILE)

FINISHED GRADE LINE

C/WAYS IN PROFILE

CULVERT IN PROFILE

C/WAYS IN PLAN

ABBREVIATIONS

A	AREA
ALIG.	ALIGNMENT
B	BREADTH
BC	BOX CULVERT
B.M	BENCH MARK
BOP	BEGINNING OF PROJECT
C	CHORD LENGTH
C.B.R	CALIFORNIA BEARING RATIO
C/C	CENTER TO CENTER
CHD.	CHECKED
C/L, ℄	CENTER LINE
CM/cm	CENTIMETER
CONC.	CONCRETE
CONST/JT	CONSTRUCTION JOINT
CS	CURVE TO SPIRAL
CUL	CULVERT
Cu.m	CUBIC METER
CURVE LEN	VERTICAL CURVE LENGTH
DC	DEPTH OF CUT
Da	DEGREE OF CURVE (BY ARC)
Dc	DEGREE OF CURVE (BY CHORD)
DEG	DEGREE
DIA.	DIAMETER
DIM.	DIMENSION
D/S	DOWNSTREAM
D.S.T	DOUBLE SURFACE TREATMENT
DRG.	DRAWING
E	EASTING , EAST , EXTERNAL DISTANCE (SHIFT)
ELEV./EL	ELEVATION
EOP	END OF PROJECT
EXP/JT	EXPANSION JOINT
G.I	GALVANIZED IRON
H/HOR.	HORIZONTAL
H.T/L.T	HIGH TENSION/LOW TENSION
HF	HEIGHT OF FILL
HFL	HIGH FLOOD LEVEL
HWY.	HIGHWAY
I	DEFLECTION ANGLE (HORIZONTAL CURVE)
Ic	CIRCULAR DEFLECTION ANGLE
I.L	INVERT LEVEL
K	SMOOTHNESS FACTOR (IN CASE OF VERTICAL CURVE)
Kg.	KILOGRAM
KM/Km	KILOMETER
L	LENGTH OF HORIZONTAL CURVE/SPIRAL
LIN.M	LINEAR METER
LHS.	LEFT HAND SIDE
LT.	LEFT
LT	LONG TANGENT
M/m	METER
M	MIDDLE ORDINATE
MAX.	MAXIMUM
M.H	MAN HOLE
MIN.	MINIMUM
mm	MILLIMETER
N.S.L	NATURAL SURFACE LEVEL (E.G.L)
N	NORTHING, NORTH
NO.	NUMBER
N.T.S	NOT TO SCALE
P	OFFSET OF TANGENT LINE TO PC OF SHIFTED CIRCLE CURVE
PC	POINT OF HORIZONTAL CURVATURE (START OF HORIZONTAL CURVE)
P.C.	REINFORCED CONCRETE PIPE CULVERT
PGL	PROFILE GRADE LINE
P.I.	PLASTICITY INDEX
PI	POINT OF HORIZONTAL INTERSECTION
PR	POINT OF ROTATION
PT	POINT OF HORIZONTAL TANGENCY (END OF HORIZONTAL CURVE)
R	RADIUS OF HORIZONTAL CURVE
R.C	REINFORCED CONCRETE
REINF.	REINFORCEMENT
REV.	REVISION
RHS.	RIGHT HAND SIDE
R.O.W.	RIGHT OF WAY
RT.	RIGHT
R/W	RETAINING WALL
RWC	RELOCATED WATER COURSE
S	SLOPE GRADIENT (PERCENT)
SE	SUPERELEVATION
S.B.P	SHOULDER BREAK POINT
S.C.	SLAB CULVERT
SC	SPIRAL TO CURVE, SLAB CULVERT
SHLD	SHOULDER
Sq.m	SQUARE METER
S.T.	SHORT TANGENT
ST	SPIRAL TO TANGENT
STA./STA	STATION (CHAINAGE)
STRUCT	STRUCTURE
SUPEREL.	SUPERELEVATION
S'WALK	SIDE WALK
T	TANGENT LENGTH OF HORIZONTAL CURVE
TS	TANGENT TO SPIRAL
T.S.T	TRIPPLE SURFACE TREATMENT
TAN.	TANGENT
TH	THICKNESS
TR	TRANSITION
TYP.	TYPICAL
U/S	UPSTREAM
V	VERTICAL
VAR.	VARIABLE
VER.	VERIFIED
VPC	VERTICAL POINT OF CURVATURE (START OF VERTICAL CURVE)
VPI	VERTICAL POINT OF INTERSECTION OF PROFILE GRADE.
VPT	VERTICAL POINT OF TANGENCY (END OF VERTICAL CURVE)
W.	WEST, WIDTH OF ROADWAY
W.B.M	WATER BOUND MACADAM
WC	WATER COURSE
X	DISTANCE, PERPENDICULAR TO THE TANGENT, FROM BEGINNING TO THE END OF SPIRAL
Y	DISTANCE, PERPENDICULAR TO THE TANGENT, FROM BEGINNING TO THE END OF SPIRAL
θ	SKEW ANGLE

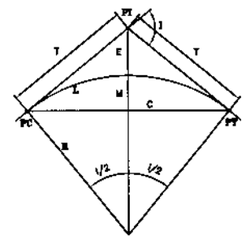

CIRCULAR CURVE PARAMETERS

KHYBER PAKHTUNKHWA INTEGRATED TOURISM AND ENTERPRISE DEVELOPMENT PROJECT C&W DEPARTMENT, KP

NATIONAL ENGINEERING SERVICES PAKISTAN (PVT.) LTD.

REV.	DATE	DESCRIPTION	APPROVED		
				DRAWN	
				SUBMITTED	
				RECOMMENDED	
				CHD./VER.	
				APPROVED	

PROJECT: CONSTRUCTION OF MANKIAL BADA SERA ROAD PROJECT (22 Km)

TITLE: SYMBOLS AND ABBREVIATIONS

DATE: JANUARY, 2021

DWG NO. 38164/102/TD/SA002A

SUMMARY OF SURVEY CONTROL POINTS

SR. No.	Easting (m)	Northing (m)	Elevation (m)	Code	SR. No.	Easting (m)	Northing (m)	Elevation (m)	Code
1	185838.79	3087089.97	1368.40	BK-1/CP-138	36	253535.00	3074925.34	1289.37	BK-36
2	186537.59	3082353.05	1412.03	BK-2	37	253676.01	3074862.46	1288.25	BK-37
3	186583.60	3081938.91	1414.28	BK-3	38	258564.58	3074486.67	1288.12	BK-38
4	188000.67	3077640.99	1476.53	BK-4	39	259003.26	3074734.04	1282.74	BK-39
5	188299.31	3077119.14	1476.41	BK-5	40	265168.76	3075304.87	1220.53	BK-40
6	190494.00	3073513.35	1434.17	BK-6	41	267485.96	3071646.20	1230.97	BK-40A
7	190599.66	3073344.95	1432.25	BK-7	42	267304.37	3071940.87	1236.25	BK-41
8	193574.38	3069231.04	1437.73	BK-8	43	185843.88	3087075.09	1368.98	BM-1
9	194437.32	3068864.47	1466.58	BK-9	44	185886.39	3086688.61	1371.36	BM-2
10	196510.39	3069085.22	1457.76	BK-10	45	188016.96	3077634.16	1476.90	BM-3
11	196870.77	3068929.37	1432.54	BK-11	46	188320.20	3077108.76	1474.73	BM-4
12	202128.29	3065216.25	1305.24	BK-12	47	193987.84	3068989.10	1444.42	BM-5
13	202421.54	3065227.74	1300.96	BK-13	48	194474.49	3068761.13	1456.00	BM-6
14	205884.23	3063305.82	1271.54	BK-14	49	201870.99	3065606.53	1308.01	BM-7
15	205839.31	3062816.20	1270.03	BK-15	50	210118.18	3061248.78	1270.12	BM-7A
16	210661.63	3061602.44	1275.02	BK-16	51	202024.68	3065416.60	1304.84	BM-8
17	210983.02	3062140.22	1292.13	BK-17	52	210425.39	3061485.61	1271.13	BM-8A
18	213449.71	3063620.71	1247.89	BK-18	53	217453.08	3061470.52	1193.19	BM-09
19	214086.22	3063344.61	1234.69	BK-19	54	218019.56	3061072.97	1182.37	BM-10
20	219044.66	3061405.99	1178.37	BK-20	55	225390.70	3065658.60	1183.80	BM-11
21	219477.51	3061550.24	1180.63	BK-21	56	225732.66	3065975.56	1186.97	BM-12
22	222445.68	3063380.33	1162.29	BK-22	57	235197.72	3069377.50	1266.17	BM-13
23	222704.22	3063536.18	1162.19	BK-23	58	235495.23	3069461.26	1267.78	BM-14
24	226034.09	3066166.04	1189.59	BK-24	59	243711.37	3071573.75	1350.26	BM-15
25	226495.67	3066470.58	1197.39	BK-25	60	244014.31	3071620.97	1346.11	BM-16
26	230337.92	3067276.84	1208.14	BK-26	61	252361.44	3074956.51	1292.76	BM-17
27	230748.54	3067418.83	1211.79	BK-27	62	252818.91	3075136.51	1300.68	BM-18
28	234667.28	3069232.63	1252.41	BK-28	63	261600.27	3075953.44	1249.07	BM-19
29	235192.19	3069411.70	1265.20	BK-29	64	261817.46	3075944.64	1254.76	BM-20
30	239748.26	3070658.00	1308.78	BK-30	65	267497.24	3071635.18	1230.69	BM-21
31	240173.01	3070732.39	1325.63	BK-31	66	267502.09	3071531.05	1229.01	BM-22
32	244127.35	3071682.51	1350.72	BK-32	67	223930.09	3066420.57	1188.05	F-C
33	244769.53	3071767.24	1336.00	BK-33	68	263125.31	3079825.61	1269.96	NHA
34	248954.22	3073626.92	1322.08	BK-34	69	188130.92	3088698.65	1385.90	TP-12
35	249237.99	3073754.75	1319.26	BK-35	70	188809.12	3089029.15	1395.26	TP-14

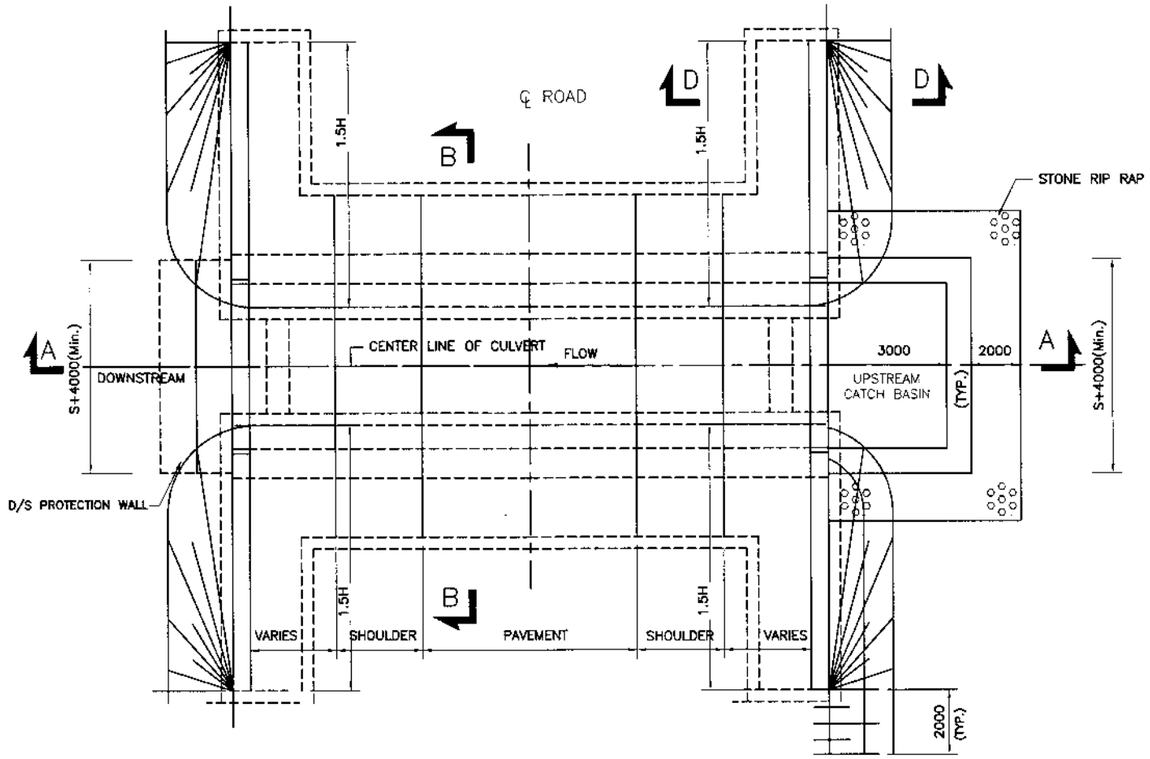

PLAN OF CULVERT

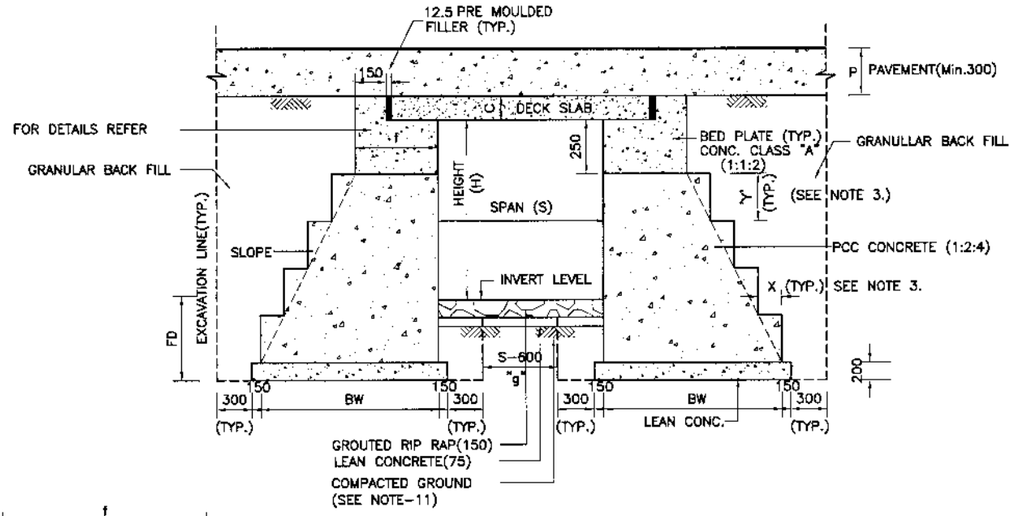

SECTION B-B

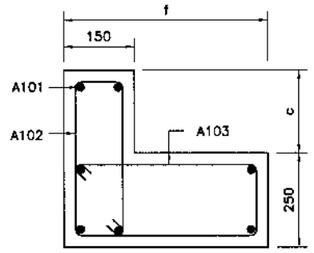

REINFORCEMENT
DETAIL OF BED PLATE
FOR ABUTMENT

NOTES:-

1. ALL DIMENSIONS ARE IN MILLIMETERS UNLESS NOTED OTHERWISE.
2. READ THIS DWG. IN CONJUNCTION WITH DWG. No 38164/102/TD/009.
3. DIMENSION 'X' & 'Y' SHALL BE FIXED FOR EACH INDIVIDUAL CASE DEPENDING UPON SLOPE OF THE MASONARY WALL.
4. FOR DIMENSION BW,c,f,FD,H AND S REFER TABLES ON DWG. No. 38164/102/TD/008
5. EXPANSION JOINT BETWEEN DECK SLAB AND BED PLATE SHALL NOT BE PAID SEPERATELY.
6. FOR DETAILS OF REINFORCEMENT IN BED PLATE REFER DWG.No.38164/102/TD/007
7. FOR DECK SLAB AND EDGE BEAM REINFORCEMENT, SEE DETAILS ON DWG.
8. A MINUMUM OF 1500 mm HIGH RETAINING WALL TYPE RW-1 SHALL BE CONSTRUCTED AT D/S OF ALL THOSE CULVERTS WHOSE INTRUSION OF CULVERT ABUTMENT INTO NATURAL GROUND IS LESS THAN 1000 AT D/S OF CVULVERT. THIS HEIGHT MAY BE INCREASED DEPENDING UPON D/S SLOPE WITH PRIOR APPROVAL OF THE ENGINEER.
9. IN CASE OF MILD SLOPES AT D/S, CUTOFF WALL MAY BE CONSTRUCTED AT AN HORIZONTAL OFFSET (MAX. UPTO 2000) AWAY FROM THE ABUTMENT. IN SUCH CASES, SPACE BETWEEN THE ABUTMENT AND D/S CUTOFF WALL SHALL BE LINED WITH 300 THICK GROUTED RIPRAP.
10. HEIGHT OF WALL ALONG U/S CATCH BASIN MAY VARY DEPENDING UPON SITE CONDITION WITH PRIOR APPROVAL OF THE ENGINEER.
11. IN CASE DIMENSION 'g' IS LESS THAN 1000, THE EARTHEN WEDGE SHALL BE REMOVED AND REPLACED WITH APPROVED BACKFILL MATERIAL.
12. WEEP HOLES SHALL BE PROVIDED ALONG OUTLET WING WALL AT A LEVEL FLUSH WITH CULVERT INLET AT @2.0m C/C .

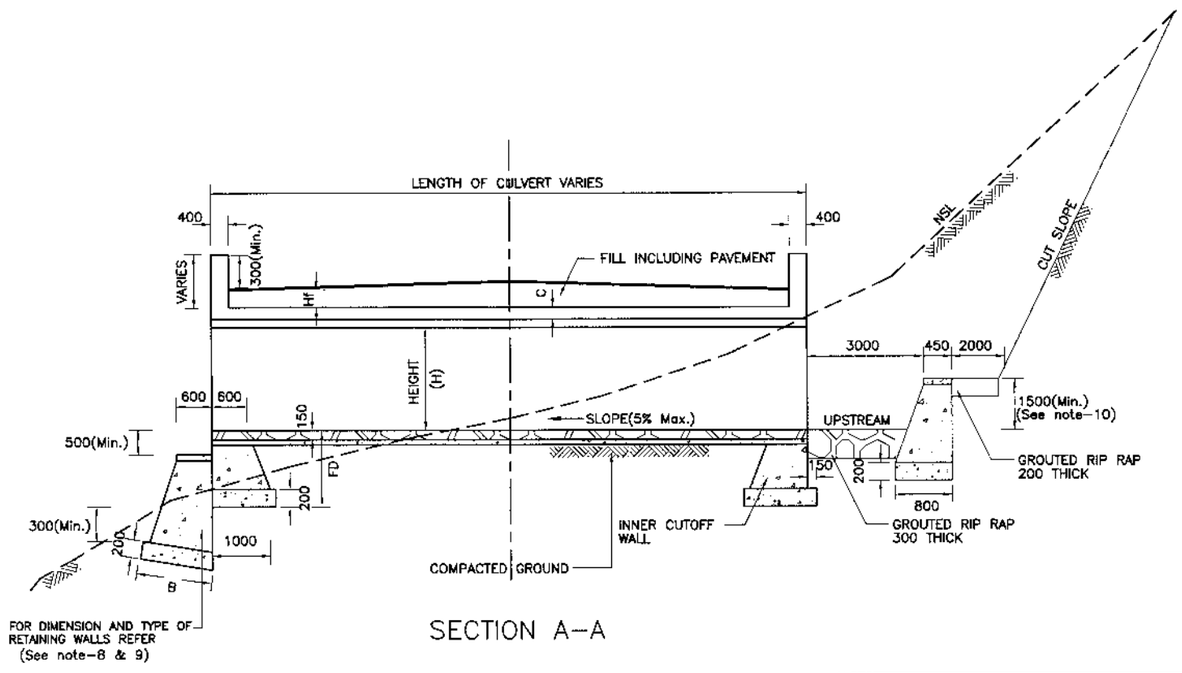

SECTION A-A

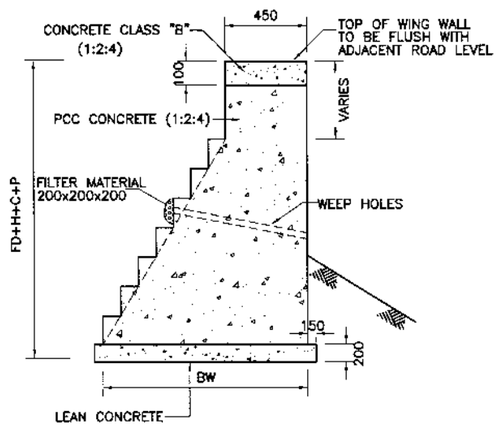

WING WALL
SECTION D-D

KHYBER PAKHTUNKHWA INTEGRATED TOURISM AND ENTERPRISE DEVELOPMENT PROJECT C&W DEPARTMENT, KP	NATIONAL ENGINEERING SERVICES PAKISTAN (PVT.) LTD.				DRAWN	PROJECT: CONSTRUCTION OF MANKIAL BADA SERA ROAD PROJECT (22 Km)	TITLE TYPICAL CULVERT DETAILS (SINGLE CELL)
					SUBMITTED		
					RECOMMENDED		
					CHD./VER.		DATE JANUARY, 2021 / DWG NO. 38164/102/TD/ SC007
		REV.	DATE	DESCRIPTION	APPROVED	APPROVED	

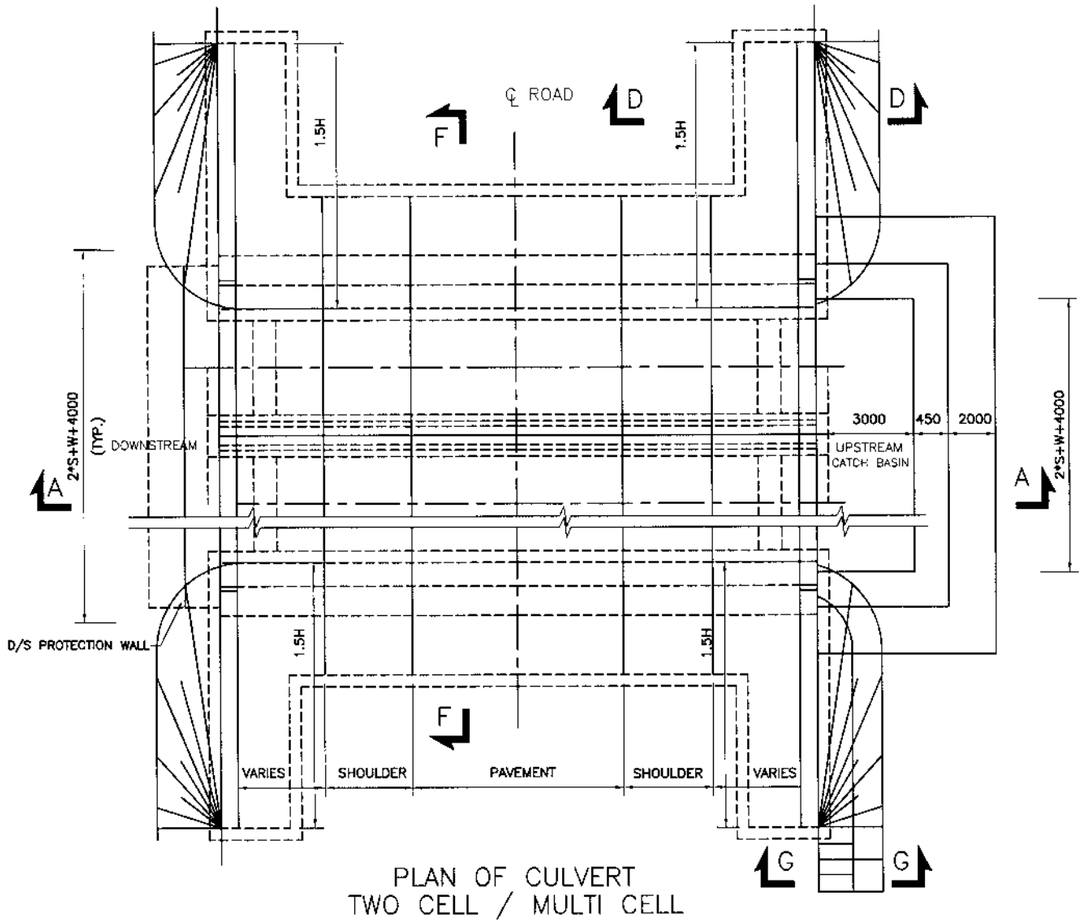

PLAN OF CULVERT
TWO CELL / MULTI CELL

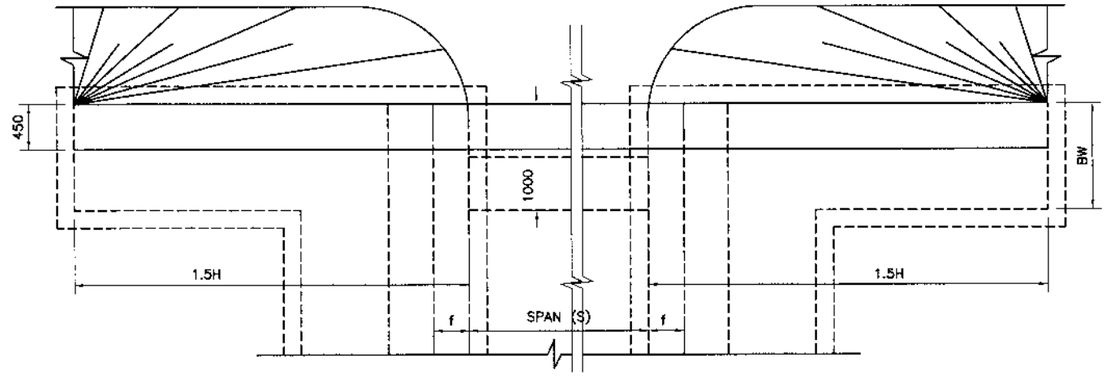

TYPICAL ENLARGED PART PLAN OF CULVERT
AT INLET AND OUTLET

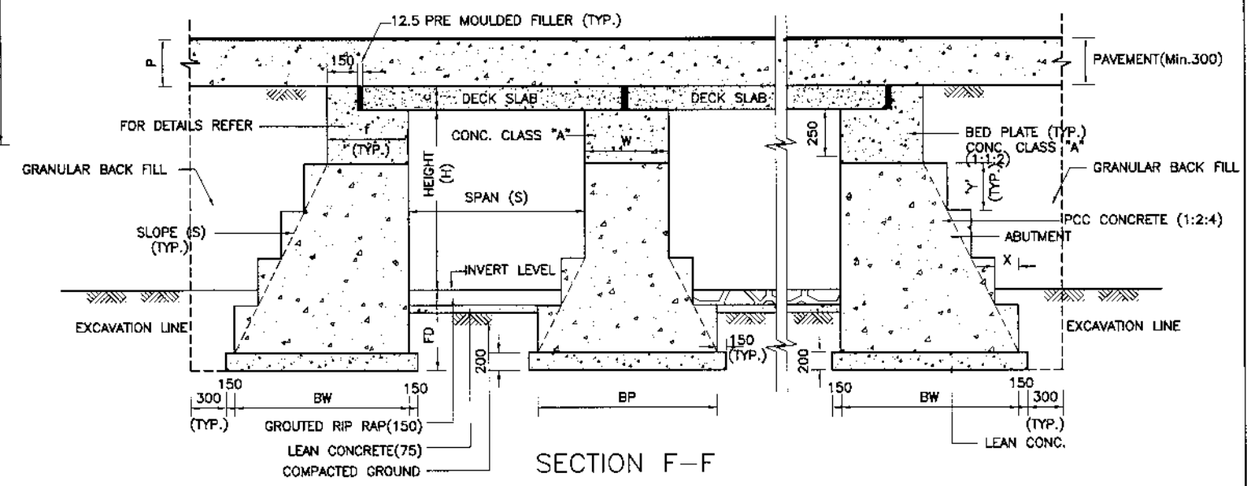

SECTION F–F

BED PLATE REINFORCEMENT

ABUTMENT							PIER					
SPAN (m)	BAR MARK	DIA mm	NOS.	BAR MARK	DIA mm	SPACING	BAR MARK	DIA mm	NOS.	BAR MARK	DIA mm	SPACING
0.6	A101	13	7	A102, A103	10	200	–	–	–	–	–	–
1.0	〃	13	〃	〃	10	〃	–	–	–	–	–	–
1.5	〃	13	〃	〃	10	〃	–	–	–	–	–	–
2.0	〃	13	〃	〃	10	〃	–	–	–	–	–	–
2.5	〃	16	〃	〃	10	〃	–	–	–	–	–	–
3.0	〃	16	〃	〃	10	〃	–	–	–	–	–	–
3.5	〃	16	〃	〃	10	〃	P101	16	4	P102	10	200
4.0	〃	16	〃	〃	10	〃	P101	16	4	P102	10	200
4.5	〃	19	〃	〃	13	〃	〃	19	〃	〃	13	〃
5.0	〃	19	〃	〃	13	〃	〃	〃	〃	〃	〃	〃
5.5	〃	19	〃	〃	13	〃	〃	〃	〃	〃	〃	〃
6.0	〃	19	〃	〃	13	〃	〃	〃	〃	〃	〃	〃
6.5	〃	19	〃	〃	13	〃	〃	〃	〃	〃	〃	〃
7.0	〃	19	〃	〃	13	〃	〃	〃	〃	〃	〃	〃

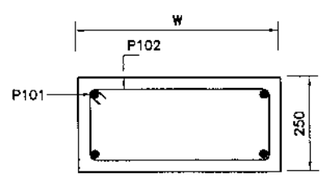

REINFORCEMENT
DETAIL OF BED PLATE
FOR PIER

ABUTMENT BED PLATE DIMENSIONS

SPAN (m)	c mm	f mm
0.6	200	450
1.0	200	450
1.5	200	450
2.0	250	450
2.5	250	450
3.0	300	600
3.5	300	600
4.0	350	600
4.5	350	600
5.0	400	600
5.5	400	600
6.0	450	650
6.5	450	650
7.0	500	700

ABUTMENT AND PIER DIMENSIONS (WITHOUT FILL)

HEIGHT (m) H	FD mm	BW mm	W mm	BP mm
0.6	1120	1204	–	–
1.0	1200	1540	–	–
1.5	1300	1960	–	–
2.0	1400	2380	–	–
2.5	1500	2800	600	3950
3.0	1600	3220	600	3950
3.5	1700	3640	750	4150
4.0	1800	4060	750	4350
4.5	1900	4480	750	4550
5.0	2000	4900	900	4900
5.5	2100	5320	900	5100
6.0	2200	5740	1000	5400
6.5	2300	6160	1000	5600
7.0	2400	6580	1000	5800

FD = FOUNDATION DEPTH
BW = BASE WIDTH OF ABUTMENT AND BASE WIDTH OF CUT–OFF WALL
W = WIDTH OF PIER
BP = BASE WIDTH OF PIER
f = WIDTH OF ABUTMENT BED PLATE
S = SPAN

NOTE:–
1. FOR NOTES REFER DWG. NO.38164/102/TD/SC008

KHYBER PAKHTUNKHWA INTEGRATED TOURISM AND ENTERPRISE DEVELOPMENT PROJECT
C&W DEPARTMENT, KP

NATIONAL ENGINEERING SERVICES PAKISTAN (PVT.) LTD.

REV.	DATE	DESCRIPTION	APPROVED		
				DRAWN	
				SUBMITTED	
				RECOMMENDED	
				CHD./VER.	
				APPROVED	

PROJECT:
CONSTRUCTION OF MANKIAL BADA SERA ROAD PROJECT (22 Km)

TITLE
TYPICAL CULVERT DETAILS (MULTI CELL)

DATE
JANUARY, 2021

DWG NO.
38164/102/TD/ SC008

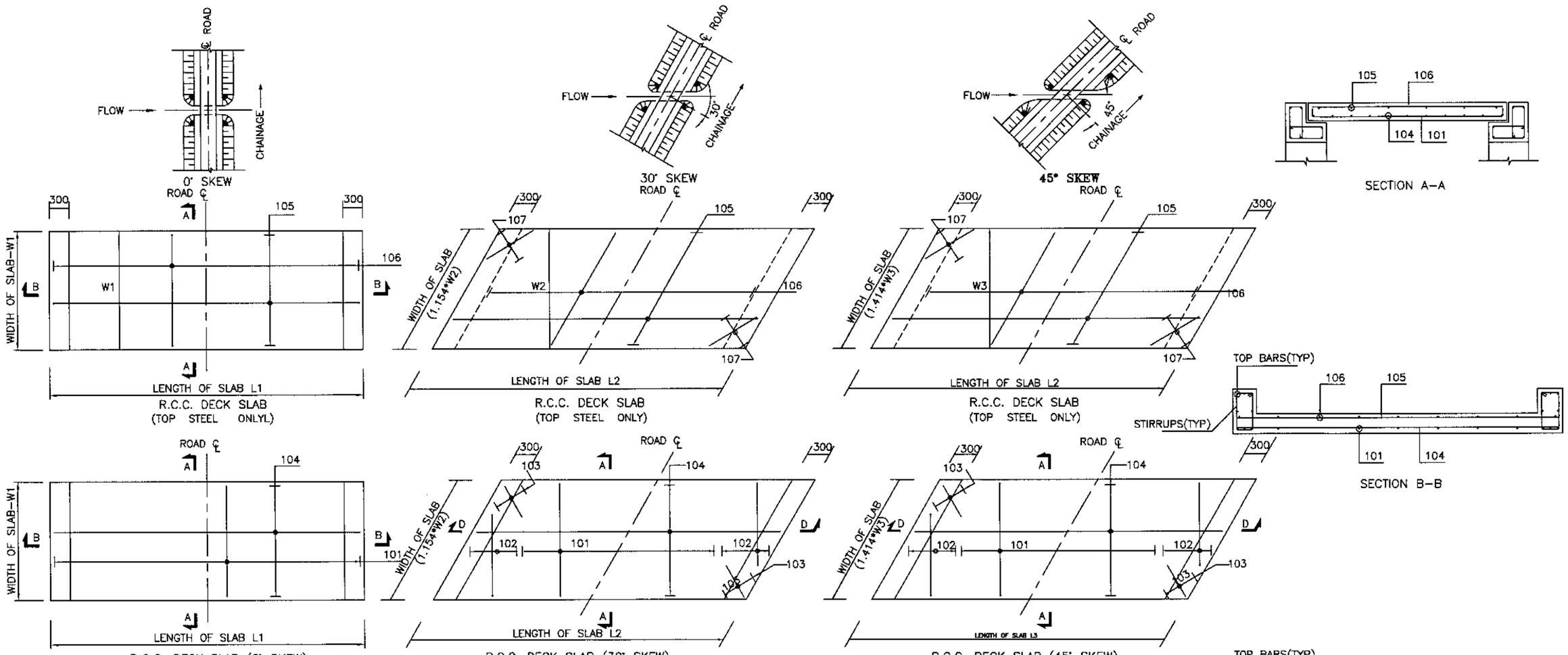

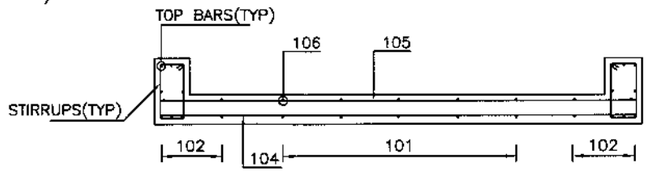

T A B L E

DECK SLAB REINFORCEMENT																									EDGE BEAM REINFORCEMENT													
																									NORMAL				SKEW 60°				SKEW 45°				TOP BARS	
																									LONG BARS		STIRRUPS		LONG BARS		STIRRUPS		LONG BARS		STIRRUPS			
SPAN	MARK	DIA. mm	SPAC. mm	MARK	DIA. mm	SPAC. mm	MARK	DIA. mm	SPAC. mm	MIN. NOS	L m	MARK	DIA. mm	SPAC. mm	MARK	DIA. mm	SPAC. mm	MARK	DIA. mm	SPAC. mm	MARK	DIA. mm	SPAC. mm	MIN. NOS	DIA	NO.	DIA	SPACE	DIA	NO.	DIA	SPACE	DIA	NO.	DIA	SPACE	DIA. mm	NOS.
0.60	101	13	160	102	13	160	103	13	200	3	0.75	104	13	200	105	13	300	106	13	300	107	13	300	2	13	4	10	300	13	6	10	300	13	8	10	300	13	4
1.00	101	16	160	102	16	160	103	13	200	4	0.75	104	13	200	105	13	300	106	13	300	107	13	300	2	16	4	10	300	16	6	10	300	16	8	10	300	14	4
1.50	101	16	110	102	16	110	103	13	170	6	1.00	104	13	170	105	13	300	106	13	300	107	13	300	2	16	4	10	250	16	6	10	250	16	8	13	250	16	4
2.00	101	19	150	102	19	150	103	13	170	7	1.25	104	13	170	105	13	300	106	13	300	107	13	300	3	19	4	13	300	19	6	13	250	19	8	13	250	19	4
2.50	101	19	120	102	19	120	103	16	250	7	1.50	104	16	250	105	13	300	106	13	300	107	13	300	3	19	4	13	300	19	6	13	250	19	8	13	200	19	4
3.00	101	19	110	102	19	110	103	16	250	9	1.75	104	16	250	105	13	300	106	13	300	107	13	300	3	19	4	13	300	19	6	13	250	19	8	13	200	19	4
3.50	101	25	150	102	25	150	103	16	220	10	1.75	104	16	220	105	13	300	106	16	300	107	16	300	3	25	4	13	300	25	6	13	300	25	8	13	300	19	4
4.00	101	25	150	102	25	150	103	16	220	12	2.00	104	16	220	105	13	300	106	16	300	107	16	300	4	25	4	13	300	25	6	13	300	25	8	13	300	19	4
4.50	101	25	130	102	25	130	103	16	200	13	2.00	104	16	200	105	16	300	106	16	300	107	16	300	4	25	4	13	300	25	6	13	300	25	8	13	300	19	4
5.00	101	25	130	102	25	130	103	16	200	14	2.25	104	16	200	105	16	300	106	16	300	107	16	300	4	25	4	13	300	25	6	13	300	25	8	13	300	19	4
5.50	101	25	110	102	25	110	103	16	200	15	2.25	104	16	200	105	16	300	106	16	300	107	16	300	4	25	4	13	300	25	6	13	300	25	8	13	300	19	4
6.00	101	32	180	102	32	180	103	16	200	16	2.50	104	16	200	105	16	300	106	16	300	107	16	300	4	32	4	13	250	32	6	13	250	32	8	13	250	19	4
6.50	101	32	160	102	32	160	103	16	200	18	2.75	104	16	200	105	16	300	106	16	300	107	16	300	4	32	4	13	250	32	6	13	250	32	8	13	250	19	4
7.00	101	32	140	102	32	140	103	16	200	18	2.75	104	16	200	105	16	300	106	16	300	107	16	300	4	32	4	13	250	32	6	13	250	32	8	13	250	19	4

SHAPE OF BARS

BARS	SHAPE
101	
102	
103	
104	
105	
106	
107	

NOTE :-

1- ALL CONCRETE SHALL BE CLASS 'A' WHERE AS REINFORCEMENT BARS SHALL BE GRADE 40'.

2- CLEAR COVER TO ALL REINFORCEMENT SHALL BE 40 mm.

KHYBER PAKHTUNKHWA INTEGRATED TOURISM AND ENTERPRISE DEVELOPMENT PROJECT C&W DEPARTMENT, KP

NATIONAL ENGINEERING SERVICES PAKISTAN (PVT.) LTD.

REV.	DATE	DESCRIPTION	APPROVED

DRAWN
SUBMITTED
RECOMMENDED
CHD./VER.
APPROVED

PROJECT: CONSTRUCTION OF MANKIAL BADA SERA ROAD PROJECT (22 Km)

TITLE: TYPICAL SLAB CULVERT REINFORCEMENT DETAILS

DATE: JANUARY, 2021

DWG NO. 38164/102/TD/ SC009

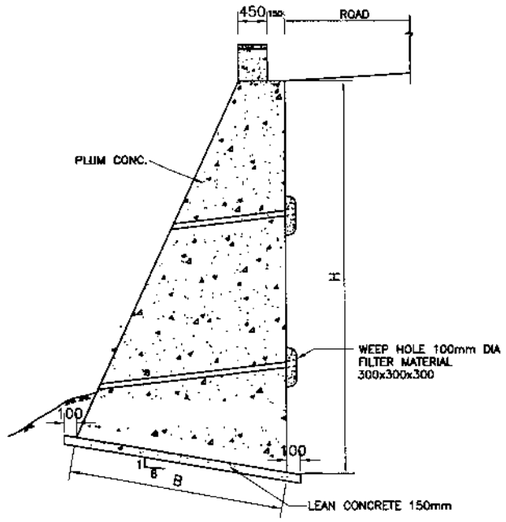

TYPICAL SECTION OF PLUM CONCRETE
RETAINING WALL TYPE 1

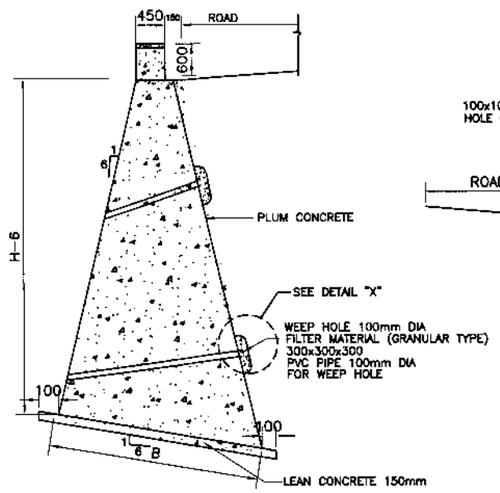

TYPICAL SECTION OF PLUM CONCRETE
RETAINING WALL TYPE 2

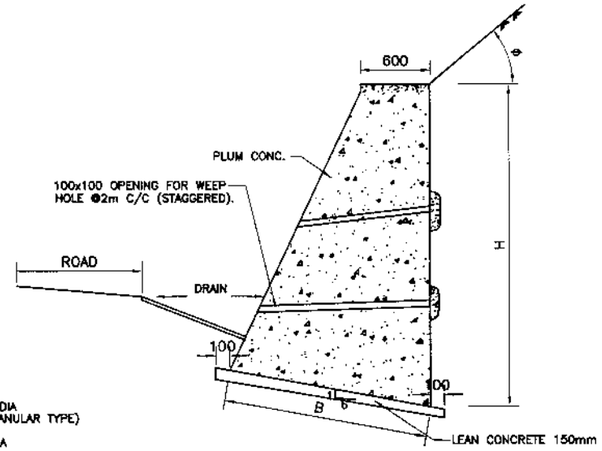

TYPICAL SECTION OF PLUM CONCRETE
RETAINING/BREAST WALL TYPE 3

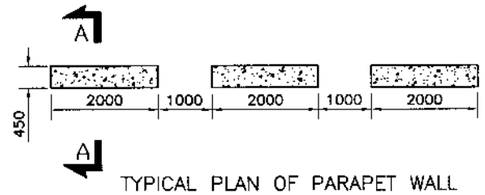

TYPICAL PLAN OF PARAPET WALL

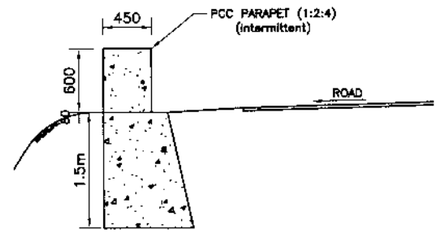

APPLICABLE WHERE NO RETAINAING WALL EXISTS
SECTION A–A

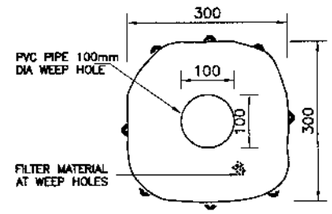

DETAIL "X"

TABLE:-

TYPE–1

H (m)	B (m)
1.50	0.60
2.00	0.80
2.50	1.00
3.00	1.20
3.50	1.50
4.00	1.80
4.50	2.00
5.00	2.30
5.50	2.60
6.00	2.90
7.00	3.40
8.00	3.90

TYPE–2

H (m)	B (m)
1.50	0.80
2.00	1.05
2.50	1.40
3.00	1.70
3.50	2.10
4.00	2.40
4.50	2.70
5.00	3.00
5.50	3.30
6.00	4.00
7.00	4.70
8.00	5.50
9.00	6.00
10.00	6.60
11.00	7.20
12.00	7.80

TYPE–3
$\theta < 40^\circ$

H (m)	B (m)
1.50	0.80
2.00	1.00
2.50	1.40
3.00	1.70
3.50	2.00
4.00	2.40
4.50	2.70
5.00	3.00
5.50	3.30
6.00	3.70
6.50	4.00
7.00	4.40
7.50	4.70
8.00	5.00

TYPE–3
$\theta \geqslant 40^\circ$

H (m)	B (m)
1.50	1.10
2.00	1.40
2.50	1.70
3.00	2.00
3.50	2.30
4.00	2.70
4.50	3.00
5.00	3.60
5.50	3.90
6.00	4.30
6.50	4.70
7.00	5.00

NOTES

1– ALL DIMENSIONS ARE IN MILLIMETERS UNLESS OTHERWISE NOTED.
2– WEEP HOLES PVC PIPE 100mm DIA SHALL BE STAGGERED AT AN INTERVAL OF 2m VERTICAL AND HORIZONTAL AND AS ADDITIONALLY DIRECTED BY THE ENGINEER.
3– THE SLOPE OF WEEP HOLE SHALL BE 1 IN 8 FROM BACK OF THE WALL TO THE OUTER FACE OR AS DIRECTED BY THE ENGINEER.
4– TYPE OF RETAINING WALL SHALL BE DECIDED BY THE ENGINEER AS PER SITE CONDITIONS KEEPING FOLLOWING IN VIEW.
5– PLUM CONCRETE (70% CONCRETE & 30% ROCK FILL MATERIAL HAVING STONE SIZE RANGING BETWEEN 200~300) BE UTILIZED.
6– TYPE 1 RETAINING WALL SHALL BE PROVIDED WHERE THE ROAD IS WELL AWAY FROM THE NALLAH, RIVER/RIVINE.
7– TYPE 2 RETAINING WALL SHALL BE PROVIDED WHERE THE ROAD IS IN CLOSE VICINITY OF THE RIVER/RIVINE OR CLIFF FACE.
8– TYPE 3 RETAINING WALL SHALL BE PROVIDED TO RETAIN THE SCREED MATERIAL (BREAST WALL).
9– PCC PARAPET SHALL BE PROVIDED AT TOP OF RETAINING WALL AND AT OTHER HAZARDOUS LOCATIONS. GUARD RAIL SHALL BE PROVIDED OVER 4m HIGH FILL OR AS DIRECTED BY THE ENGINEER.
10– VERTICAL SLOPE TO THE OUTER FACE OF THE RETAINING WALL TYPE 2 CAN BE CHANGE UP TO 1 IN 10.
11– PAYMENT FOR WEEP HOLES AND FILTER MATERIAL IS INCLUDED IN THE COST OF OTHER ITEMS AND SHALL NOT BE PAID SEPARATELY.

KHYBER PAKHTUNKHWA
INTEGRATED TOURISM
AND ENTERPRISE
DEVELOPMENT PROJECT
C&W DEPARTMENT, KP

NATIONAL ENGINEERING SERVICES
PAKISTAN (PVT.) LTD.

REV.	DATE	DESCRIPTION	APPROVED

DRAWN
SUBMITTED
RECOMMENDED
CHD./VER.
APPROVED

PROJECT:
CONSTRUCTION OF
MANKIAL BADA SERA ROAD
PROJECT (22 Km)

TITLE
TYPICAL PLUM CONC.
RETAINING WALL DETAILS

DATE
JANUARY, 2021

DWG NO.
38164/102/TD/RWP011

Superelevation Region	Station	Description	Left Outside Lane	Right Outside Lane	Superelevation Region	Station	Description	Left Outside Lane	Right Outside Lane	Superelevation Region	Station	Description	Left Outside Lane	Right Outside Lane	Superelevation Region	Station	Description	Left Outside Lane	Right Outside Lane
	0+000.00m	Begin Alignment	-2.00%	-2.00%	8	0+389.16m	Level Crown	0.00%	-2.00%	16	0+736.13m	Reverse Crown	2.00%	-2.00%	24	1+222.05m	End Full Super	-4.40%	4.40%
1	-0+026.83m	End Normal Crown	-2.00%	-2.00%	8	0+399.16m	Begin Normal Crown	-2.00%	-2.00%	16	0+745.72m	Level Crown	0.00%	-2.00%	24	1+233.50m	Reverse Crown	-2.00%	2.00%
1	-0+017.16m	Level Crown	0.00%	-2.00%	9	0+376.54m	End Normal Crown	-2.00%	-2.00%	16	0+755.30m	Begin Normal Crown	-2.00%	-2.00%	24	1+243.05m	Level Crown	-2.00%	0.00%
1	-0+007.49m	Reverse Crown	2.00%	-2.00%	9	0+385.83m	Level Crown	-2.00%	0.00%	17	0+710.32m	End Normal Crown	-2.00%	-2.00%	24	1+252.60m	Begin Normal Crown	-2.00%	-2.00%
1	0+011.84m	Begin Full Super	6.00%	-6.00%	9	0+395.11m	Reverse Crown	-2.00%	2.00%	17	0+719.82m	Level Crown	0.00%	-2.00%	25	1+222.33m	End Normal Crown	-2.00%	-2.00%
1	0+012.90m	End Full Super	6.00%	-6.00%	9	0+398.83m	Begin Full Super	-2.80%	2.80%	17	0+729.32m	Reverse Crown	2.00%	-2.00%	25	1+231.70m	Level Crown	-2.00%	0.00%
1	0+032.24m	Reverse Crown	2.00%	-2.00%	9	0+446.96m	End Full Super	-2.80%	2.80%	17	0+738.82m	Begin Full Super	4.00%	-4.00%	25	1+241.08m	Reverse Crown	-2.00%	2.00%
1	0+041.90m	Level Crown	0.00%	-2.00%	9	0+450.67m	Reverse Crown	-2.00%	2.00%	17	0+742.28m	End Full Super	4.00%	-4.00%	25	1+246.70m	Begin Full Super	-3.20%	3.20%
1	0+051.57m	Begin Normal Crown	-2.00%	-2.00%	9	0+459.96m	Level Crown	-2.00%	0.00%	17	0+751.78m	Reverse Crown	2.00%	-2.00%	25	1+268.20m	End Full Super	-3.20%	3.20%
2	-0+003.86m	End Normal Crown	-2.00%	-2.00%	9	0+469.25m	Begin Normal Crown	-2.00%	-2.00%	17	0+761.28m	Level Crown	0.00%	-2.00%	25	1+273.83m	Reverse Crown	-2.00%	2.00%
2	0+005.81m	Level Crown	-2.00%	0.00%	10	0+487.60m	End Normal Crown	-2.00%	-2.00%	17	0+770.78m	Begin Normal Crown	-2.00%	-2.00%	25	1+283.20m	Level Crown	-2.00%	0.00%
2	0+015.47m	Reverse Crown	-2.00%	2.00%	10	0+497.60m	Level Crown	-2.00%	0.00%	18	0+740.82m	End Normal Crown	-2.00%	-2.00%	25	1+292.58m	Begin Normal Crown	-2.00%	-2.00%
2	0+029.37m	End Full Super	-6.00%	6.00%	10	0+507.60m	Reverse Crown	-2.00%	2.00%	18	0+750.82m	Level Crown	0.00%	-2.00%	26	1+255.86m	End Normal Crown	-2.00%	-2.00%
2	0+034.81m	Begin Full Super	-6.00%	6.00%	10	0+509.60m	Begin Full Super	-2.40%	2.40%	18	0+760.82m	Begin Full Super	2.00%	-2.00%	26	1+265.27m	Level Crown	0.00%	-2.00%
2	0+048.70m	Reverse Crown	-2.00%	2.00%	10	0+529.79m	End Full Super	-2.40%	2.40%	18	0+760.82m	Reverse Crown	2.00%	-2.00%	26	1+274.68m	Reverse Crown	2.00%	-2.00%
2	0+058.37m	Level Crown	-2.00%	0.00%	10	0+531.79m	Reverse Crown	-2.00%	2.00%	18	0+787.79m	End Full Super	2.00%	-2.00%	26	1+281.27m	Begin Full Super	3.40%	-3.40%
2	0+068.04m	Begin Normal Crown	-2.00%	-2.00%	10	0+541.79m	Level Crown	-2.00%	0.00%	18	0+787.79m	Reverse Crown	2.00%	-2.00%	26	1+299.64m	End Full Super	3.40%	-3.40%
3	0+013.96m	End Normal Crown	-2.00%	-2.00%	10	0+551.79m	Begin Normal Crown	-2.00%	-2.00%	18	0+797.79m	Level Crown	0.00%	-2.00%	26	1+306.23m	Reverse Crown	2.00%	-2.00%
3	0+023.63m	Level Crown	-2.00%	0.00%	11	0+519.98m	End Normal Crown	-2.00%	-2.00%	18	0+807.79m	Begin Normal Crown	-2.00%	-2.00%	26	1+315.64m	Level Crown	0.00%	-2.00%
3	0+033.29m	Reverse Crown	-2.00%	2.00%	11	0+529.50m	Level Crown	-2.00%	0.00%	19	0+804.22m	End Normal Crown	-2.00%	-2.00%	26	1+325.05m	Begin Normal Crown	-2.00%	-2.00%
3	0+040.91m	End Full Super	-6.00%	6.00%	11	0+539.03m	Reverse Crown	-2.00%	2.00%	19	0+814.22m	Level Crown	0.00%	-2.00%	27	1+292.28m	End Normal Crown	-2.00%	-2.00%
3	0+052.63m	Begin Full Super	-6.00%	6.00%	11	0+549.50m	Begin Full Super	-4.20%	4.20%	19	0+824.22m	Begin Full Super	2.00%	-2.00%	27	1+301.56m	Level Crown	-2.00%	0.00%
3	0+060.24m	Reverse Crown	-2.00%	2.00%	11	0+566.17m	End Full Super	-4.20%	4.20%	19	0+824.22m	Reverse Crown	2.00%	-2.00%	27	1+310.85m	Reverse Crown	-2.00%	2.00%
3	0+069.91m	Level Crown	-2.00%	0.00%	11	0+576.65m	Reverse Crown	-2.00%	2.00%	19	0+853.79m	End Full Super	2.00%	-2.00%	27	1+314.56m	Begin Full Super	-2.80%	2.80%
3	0+079.57m	Begin Normal Crown	-2.00%	-2.00%	11	0+586.17m	Level Crown	-2.00%	0.00%	19	0+853.79m	Reverse Crown	2.00%	-2.00%	27	1+343.62m	End Full Super	-2.80%	2.80%
4	0+080.30m	End Normal Crown	-2.00%	-2.00%	11	0+595.70m	Begin Normal Crown	-2.00%	-2.00%	19	0+863.79m	Level Crown	0.00%	-2.00%	27	1+347.33m	Reverse Crown	-2.00%	2.00%
4	0+089.59m	Level Crown	0.00%	-2.00%	12	0+567.97m	End Normal Crown	-2.00%	-2.00%	19	0+873.79m	Begin Normal Crown	-2.00%	-2.00%	27	1+356.62m	Level Crown	-2.00%	0.00%
4	0+098.87m	Reverse Crown	2.00%	-2.00%	12	0+577.50m	Level Crown	0.00%	-2.00%	20	0+843.15m	End Normal Crown	-2.00%	-2.00%	27	1+365.90m	Begin Normal Crown	-2.00%	-2.00%
4	0+102.59m	Begin Full Super	2.80%	-2.80%	12	0+587.02m	Reverse Crown	2.00%	-2.00%	20	0+852.65m	Level Crown	-2.00%	0.00%	28	1+393.58m	End Normal Crown	-2.00%	-2.00%
4	0+133.45m	End Full Super	2.80%	-2.80%	12	0+597.50m	Begin Full Super	4.20%	-4.20%	20	0+862.15m	Reverse Crown	-2.00%	2.00%	28	1+402.96m	Level Crown	-2.00%	0.00%
4	0+137.16m	Reverse Crown	2.00%	-2.00%	12	0+603.74m	End Full Super	4.20%	-4.20%	20	0+871.65m	Begin Full Super	-4.00%	4.00%	28	1+412.33m	Reverse Crown	-2.00%	2.00%
4	0+146.45m	Level Crown	0.00%	-2.00%	12	0+614.21m	Reverse Crown	2.00%	-2.00%	20	0+889.21m	End Full Super	-4.00%	4.00%	28	1+417.96m	Begin Full Super	-3.20%	3.20%
4	0+155.73m	Begin Normal Crown	-2.00%	-2.00%	12	0+623.74m	Level Crown	0.00%	-2.00%	20	0+898.71m	Reverse Crown	-2.00%	2.00%	28	1+436.78m	End Full Super	-3.20%	3.20%
5	0+144.16m	End Normal Crown	-2.00%	-2.00%	12	0+633.26m	Begin Normal Crown	-2.00%	-2.00%	20	0+908.21m	Level Crown	-2.00%	0.00%	28	1+442.41m	Reverse Crown	-2.00%	2.00%
5	0+153.57m	Level Crown	0.00%	-2.00%	13	0+590.17m	End Normal Crown	-2.00%	-2.00%	20	0+917.71m	Begin Normal Crown	-2.00%	-2.00%	28	1+451.78m	Level Crown	-2.00%	0.00%
5	0+162.98m	Reverse Crown	2.00%	-2.00%	13	0+599.77m	Level Crown	-2.00%	0.00%	21	0+894.28m	End Normal Crown	-2.00%	-2.00%	28	1+461.16m	Begin Normal Crown	-2.00%	-2.00%
5	0+169.57m	Begin Full Super	3.40%	-3.40%	13	0+609.37m	Reverse Crown	-2.00%	2.00%	21	0+903.78m	Level Crown	0.00%	-2.00%	29	1+428.42m	End Normal Crown	-2.00%	-2.00%
5	0+188.75m	End Full Super	3.40%	-3.40%	13	0+621.62m	End Full Super	-5.00%	5.00%	21	0+913.28m	Reverse Crown	2.00%	-2.00%	29	1+437.87m	Level Crown	0.00%	-2.00%
5	0+195.34m	Reverse Crown	2.00%	-2.00%	13	0+623.77m	Begin Full Super	-5.00%	5.00%	21	0+922.78m	Begin Full Super	4.00%	-4.00%	29	1+447.31m	Reverse Crown	2.00%	-2.00%
5	0+204.75m	Level Crown	0.00%	-2.00%	13	0+636.02m	Reverse Crown	-2.00%	2.00%	21	0+963.45m	End Full Super	4.00%	-4.00%	29	1+454.87m	Begin Full Super	3.60%	-3.60%
5	0+214.16m	Begin Normal Crown	-2.00%	-2.00%	13	0+645.62m	Level Crown	-2.00%	0.00%	21	0+972.95m	Reverse Crown	2.00%	-2.00%	29	1+480.32m	End Full Super	3.60%	-3.60%
6	0+254.32m	End Normal Crown	-2.00%	-2.00%	13	0+655.22m	Begin Normal Crown	-2.00%	-2.00%	21	0+982.45m	Level Crown	0.00%	-2.00%	29	1+487.88m	Reverse Crown	2.00%	-2.00%
6	0+263.98m	Level Crown	-2.00%	0.00%	14	0+619.75m	End Normal Crown	-2.00%	-2.00%	21	0+991.95m	Begin Normal Crown	-2.00%	-2.00%	29	1+497.32m	Level Crown	0.00%	-2.00%
6	0+273.65m	Reverse Crown	-2.00%	2.00%	14	0+629.22m	Level Crown	0.00%	-2.00%	22	1+021.57m	End Normal Crown	-2.00%	-2.00%	29	1+506.77m	Begin Normal Crown	-2.00%	-2.00%
6	0+292.98m	Begin Full Super	-6.00%	6.00%	14	0+638.70m	Reverse Crown	2.00%	-2.00%	22	1+031.22m	Level Crown	0.00%	-2.00%	30	1+518.20m	End Normal Crown	-2.00%	-2.00%
6	0+300.00m	End Full Super	-6.00%	6.00%	14	0+647.22m	Begin Full Super	3.80%	-3.80%	22	1+040.88m	Reverse Crown	2.00%	-2.00%	30	1+527.70m	Level Crown	0.00%	-2.00%
6	0+319.34m	Reverse Crown	-2.00%	2.00%	14	0+662.93m	End Full Super	3.80%	-3.80%	22	1+059.22m	Begin Full Super	5.80%	-5.80%	30	1+537.20m	Reverse Crown	2.00%	-2.00%
6	0+329.00m	Level Crown	-2.00%	0.00%	14	0+671.45m	Reverse Crown	2.00%	-2.00%	22	1+076.03m	End Full Super	5.80%	-5.80%	30	1+546.70m	Begin Full Super	4.00%	-4.00%
6	0+338.67m	Begin Normal Crown	-2.00%	-2.00%	14	0+680.93m	Level Crown	0.00%	-2.00%	22	1+094.37m	Reverse Crown	2.00%	-2.00%	30	1+564.73m	End Full Super	4.00%	-4.00%
7	0+291.11m	End Normal Crown	-2.00%	-2.00%	14	0+690.40m	Begin Normal Crown	-2.00%	-2.00%	22	1+104.03m	Level Crown	0.00%	-2.00%	30	1+574.23m	Reverse Crown	2.00%	-2.00%
7	0+300.64m	Level Crown	-2.00%	0.00%	15	0+647.25m	End Normal Crown	-2.00%	-2.00%	22	1+113.68m	Begin Normal Crown	-2.00%	-2.00%	30	1+583.73m	Level Crown	0.00%	-2.00%
7	0+310.16m	Reverse Crown	-2.00%	2.00%	15	0+656.88m	Level Crown	-2.00%	0.00%	23	1+082.64m	End Normal Crown	-2.00%	-2.00%	30	1+593.23m	Begin Normal Crown	-2.00%	-2.00%
7	0+320.64m	Begin Full Super	-4.20%	4.20%	15	0+666.51m	Reverse Crown	-2.00%	2.00%	23	1+092.05m	Level Crown	-2.00%	0.00%	31	1+568.82m	End Normal Crown	-2.00%	-2.00%
7	0+324.80m	End Full Super	-4.20%	4.20%	15	0+682.88m	Begin Full Super	-5.40%	5.40%	23	1+101.46m	Reverse Crown	-2.00%	2.00%	31	1+578.30m	Level Crown	-2.00%	0.00%
7	0+335.27m	Reverse Crown	-2.00%	2.00%	15	0+691.50m	End Full Super	-5.40%	5.40%	23	1+108.05m	Begin Full Super	-3.40%	3.40%	31	1+587.77m	Reverse Crown	-2.00%	2.00%
7	0+344.80m	Level Crown	-2.00%	0.00%	15	0+707.87m	Reverse Crown	-2.00%	2.00%	23	1+131.73m	End Full Super	-3.40%	3.40%	31	1+596.30m	Begin Full Super	-3.80%	3.80%
7	0+354.32m	Begin Normal Crown	-2.00%	-2.00%	15	0+717.50m	Level Crown	-2.00%	0.00%	23	1+138.32m	Reverse Crown	-2.00%	2.00%	31	1+645.38m	End Full Super	-3.80%	3.80%
8	0+345.86m	End Normal Crown	-2.00%	-2.00%	15	0+727.13m	Begin Normal Crown	-2.00%	-2.00%	23	1+147.73m	Level Crown	-2.00%	0.00%	31	1+653.90m	Reverse Crown	-2.00%	2.00%
8	0+355.86m	Level Crown	0.00%	-2.00%	16	0+688.05m	End Normal Crown	-2.00%	-2.00%	23	1+157.14m	Begin Normal Crown	-2.00%	-2.00%	31	1+663.38m	Level Crown	-2.00%	0.00%
8	0+365.86m	Begin Full Super	2.00%	-2.00%	16	0+697.63m	Level Crown	0.00%	-2.00%	24	1+165.69m	End Normal Crown	-2.00%	-2.00%	31	1+672.85m	Begin Normal Crown	-2.00%	-2.00%
8	0+365.86m	Reverse Crown	2.00%	-2.00%	16	0+707.21m	Reverse Crown	2.00%	-2.00%	24	1+175.24m	Level Crown	-2.00%	0.00%	32	1+651.22m	End Normal Crown	-2.00%	-2.00%
8	0+379.16m	End Full Super	2.00%	-2.00%	16	0+720.63m	Begin Full Super	4.80%	-4.80%	24	1+184.78m	Reverse Crown	-2.00%	2.00%	32	1+660.50m	Level Crown	0.00%	-2.00%
8	0+379.16m	Reverse Crown	2.00%	-2.00%	16	0+722.72m	End Full Super	4.80%	-4.80%	24	1+196.24m	Begin Full Super	-4.40%	4.40%	32	1+669.79m	Reverse Crown	2.00%	-2.00%

KHYBER PAKHTUNKHWA INTEGRATED TOURISM AND ENTERPRISE DEVELOPMENT PROJECT
C&W DEPARTMENT, KP

NATIONAL ENGINEERING SERVICES PAKISTAN (PVT.) LTD.

REV.	DATE	DESCRIPTION	APPROVED

DRAWN
SUBMITTED
RECOMMENDED
CHD./VER.
APPROVED

PROJECT: UPGRADATION OF MANKIAL BADA SERI ROAD SWAT

TITLE: SUPERELEVATION SCHEME

DATE: JANUARY 2021

DWG NO. 4169/(iii)/TD SS001

Superelevation Region	Station	Description	Left Outside Lane	Right Outside Lane	Superelevation Region	Station	Description	Left Outside Lane	Right Outside Lane	Superelevation Region	Station	Description	Left Outside Lane	Right Outside Lane	Superelevation Region	Station	Description	Left Outside Lane	Right Outside Lane
32	1+673.50m	Begin Full Super	2.80%	-2.80%	40	2+138.80m	Reverse Crown	2.00%	-2.00%	48	2+543.01m	Level Crown	-2.00%	0.00%	56	3+028.18m	End Normal Crown	-2.00%	-2.00%
32	1+704.68m	End Full Super	2.80%	-2.80%	40	2+149.27m	Begin Full Super	4.20%	-4.20%	48	2+552.67m	Reverse Crown	-2.00%	2.00%	56	3+037.46m	Level Crown	0.00%	-2.00%
32	1+708.40m	Reverse Crown	2.00%	-2.00%	40	2+169.71m	End Full Super	4.20%	-4.20%	48	2+571.76m	End Full Super	-6.00%	6.00%	56	3+046.75m	Reverse Crown	2.00%	-2.00%
32	1+717.68m	Level Crown	0.00%	-2.00%	40	2+180.18m	Reverse Crown	2.00%	-2.00%	48	2+572.01m	Begin Full Super	-6.00%	6.00%	56	3+050.46m	Begin Full Super	2.80%	-2.80%
32	1+726.97m	Begin Normal Crown	-2.00%	-2.00%	40	2+189.71m	Level Crown	0.00%	-2.00%	48	2+591.09m	Reverse Crown	-2.00%	2.00%	56	3+055.61m	End Full Super	2.80%	-2.80%
33	1+706.65m	End Normal Crown	-2.00%	-2.00%	40	2+199.23m	Begin Normal Crown	-2.00%	-2.00%	48	2+600.76m	Level Crown	-2.00%	0.00%	56	3+059.32m	Reverse Crown	2.00%	-2.00%
33	1+715.93m	Level Crown	-2.00%	0.00%	41	2+207.03m	End Normal Crown	-2.00%	-2.00%	48	2+610.42m	Begin Normal Crown	-2.00%	-2.00%	56	3+068.61m	Level Crown	0.00%	-2.00%
33	1+725.22m	Reverse Crown	-2.00%	2.00%	41	2+217.03m	Level Crown	0.00%	-2.00%	49	2+613.20m	End Normal Crown	-2.00%	-2.00%	56	3+077.89m	Begin Normal Crown	-2.00%	-2.00%
33	1+728.93m	Begin Full Super	-2.80%	2.80%	41	2+227.03m	Begin Full Super	2.00%	-2.00%	49	2+622.49m	Level Crown	0.00%	-2.00%	57	3+038.81m	End Normal Crown	-2.00%	-2.00%
33	1+798.22m	End Full Super	-2.80%	2.80%	41	2+227.03m	Reverse Crown	2.00%	-2.00%	49	2+631.77m	Reverse Crown	2.00%	-2.00%	57	3+048.39m	Level Crown	-2.00%	0.00%
33	1+801.94m	Reverse Crown	-2.00%	2.00%	41	2+255.70m	End Full Super	2.00%	-2.00%	49	2+635.49m	Begin Full Super	2.80%	-2.80%	57	3+057.98m	Reverse Crown	-2.00%	2.00%
33	1+811.22m	Level Crown	-2.00%	0.00%	41	2+255.70m	Reverse Crown	2.00%	-2.00%	49	2+668.18m	End Full Super	2.80%	-2.80%	57	3+071.39m	Begin Full Super	-4.80%	4.80%
33	1+820.51m	Begin Normal Crown	-2.00%	-2.00%	41	2+265.70m	Level Crown	0.00%	-2.00%	49	2+671.89m	Reverse Crown	2.00%	-2.00%	57	3+080.14m	End Full Super	-4.80%	4.80%
34	1+789.03m	End Normal Crown	-2.00%	-2.00%	41	2+275.70m	Begin Normal Crown	-2.00%	-2.00%	49	2+681.18m	Level Crown	0.00%	-2.00%	57	3+093.56m	Reverse Crown	-2.00%	2.00%
34	1+798.61m	Level Crown	0.00%	-2.00%	42	2+306.36m	End Normal Crown	-2.00%	-2.00%	49	2+690.46m	Begin Normal Crown	-2.00%	-2.00%	57	3+103.14m	Level Crown	-2.00%	0.00%
34	1+808.20m	Reverse Crown	2.00%	-2.00%	42	2+315.64m	Level Crown	-2.00%	0.00%	50	2+654.79m	End Normal Crown	-2.00%	-2.00%	57	3+112.73m	Begin Normal Crown	-2.00%	-2.00%
34	1+821.61m	Begin Full Super	4.80%	-4.80%	42	2+324.93m	Reverse Crown	-2.00%	2.00%	50	2+664.38m	Level Crown	0.00%	-2.00%	58	3+099.79m	End Normal Crown	-2.00%	-2.00%
34	1+840.39m	End Full Super	4.80%	-4.80%	42	2+328.64m	Begin Full Super	-2.80%	2.80%	50	2+673.96m	Reverse Crown	2.00%	-2.00%	58	3+109.27m	Level Crown	0.00%	-2.00%
34	1+853.80m	Reverse Crown	2.00%	-2.00%	42	2+372.01m	End Full Super	-2.80%	2.80%	50	2+687.38m	Begin Full Super	4.80%	-4.80%	58	3+118.74m	Reverse Crown	2.00%	-2.00%
34	1+863.39m	Level Crown	0.00%	-2.00%	42	2+375.72m	Reverse Crown	-2.00%	2.00%	50	2+689.42m	End Full Super	4.80%	-4.80%	58	3+127.27m	Begin Full Super	3.80%	-3.80%
34	1+872.97m	Begin Normal Crown	-2.00%	-2.00%	42	2+385.01m	Level Crown	-2.00%	0.00%	50	2+702.84m	Reverse Crown	2.00%	-2.00%	58	3+148.99m	End Full Super	3.80%	-3.80%
35	1+843.02m	End Normal Crown	-2.00%	-2.00%	42	2+394.29m	Begin Normal Crown	-2.00%	-2.00%	50	2+712.42m	Level Crown	0.00%	-2.00%	58	3+157.51m	Reverse Crown	2.00%	-2.00%
35	1+852.61m	Level Crown	0.00%	-2.00%	43	2+358.54m	End Normal Crown	-2.00%	-2.00%	50	2+722.00m	Begin Normal Crown	-2.00%	-2.00%	58	3+166.99m	Level Crown	0.00%	-2.00%
35	1+862.19m	Reverse Crown	2.00%	-2.00%	43	2+368.07m	Level Crown	0.00%	-2.00%	51	2+711.03m	End Normal Crown	-2.00%	-2.00%	58	3+176.46m	Begin Normal Crown	-2.00%	-2.00%
35	1+875.61m	Begin Full Super	4.80%	-4.80%	43	2+377.59m	Reverse Crown	2.00%	-2.00%	51	2+720.31m	Level Crown	0.00%	-2.00%	59	3+159.54m	End Normal Crown	-2.00%	-2.00%
35	1+889.65m	End Full Super	4.80%	-4.80%	43	2+387.72m	End Full Super	4.20%	-4.20%	51	2+729.60m	Reverse Crown	2.00%	-2.00%	59	3+168.98m	Level Crown	-2.00%	0.00%
35	1+903.07m	Reverse Crown	2.00%	-2.00%	43	2+388.07m	Begin Full Super	4.20%	-4.20%	51	2+733.31m	Begin Full Super	2.80%	-2.80%	59	3+178.42m	Reverse Crown	-2.00%	2.00%
35	1+912.65m	Level Crown	0.00%	-2.00%	43	2+398.20m	Reverse Crown	2.00%	-2.00%	51	2+804.27m	End Full Super	2.80%	-2.80%	59	3+185.98m	Begin Full Super	-3.60%	3.60%
35	1+922.23m	Begin Normal Crown	-2.00%	-2.00%	43	2+407.72m	Level Crown	0.00%	-2.00%	51	2+807.98m	Reverse Crown	2.00%	-2.00%	59	3+196.28m	End Full Super	-3.60%	3.60%
36	1+884.37m	End Normal Crown	-2.00%	-2.00%	43	2+417.24m	Begin Normal Crown	-2.00%	-2.00%	51	2+817.27m	Level Crown	0.00%	-2.00%	59	3+203.83m	Reverse Crown	-2.00%	2.00%
36	1+893.82m	Level Crown	-2.00%	0.00%	44	2+385.03m	End Normal Crown	-2.00%	-2.00%	51	2+826.55m	Begin Normal Crown	-2.00%	-2.00%	59	3+213.28m	Level Crown	-2.00%	0.00%
36	1+903.26m	Reverse Crown	-2.00%	2.00%	44	2+394.55m	Level Crown	0.00%	-2.00%	52	2+787.17m	End Normal Crown	-2.00%	-2.00%	59	3+222.72m	Begin Normal Crown	-2.00%	-2.00%
36	1+910.82m	Begin Full Super	-3.60%	3.60%	44	2+404.08m	Reverse Crown	2.00%	-2.00%	52	2+796.67m	Level Crown	-2.00%	0.00%	60	3+199.57m	End Normal Crown	-2.00%	-2.00%
36	1+939.82m	End Full Super	-3.60%	3.60%	44	2+411.49m	End Full Super	4.20%	-4.20%	52	2+806.17m	Reverse Crown	-2.00%	2.00%	60	3+208.86m	Level Crown	-2.00%	0.00%
36	1+947.37m	Reverse Crown	-2.00%	2.00%	44	2+414.55m	Begin Full Super	4.20%	-4.20%	52	2+815.35m	End Full Super	-4.00%	4.00%	60	3+218.14m	Reverse Crown	-2.00%	2.00%
36	1+956.82m	Level Crown	-2.00%	0.00%	44	2+421.97m	Reverse Crown	2.00%	-2.00%	52	2+815.67m	Begin Full Super	-4.00%	4.00%	60	3+221.86m	Begin Full Super	-2.80%	2.80%
36	1+966.26m	Begin Normal Crown	-2.00%	-2.00%	44	2+431.49m	Level Crown	0.00%	-2.00%	52	2+824.85m	Reverse Crown	-2.00%	2.00%	60	3+264.57m	End Full Super	-2.80%	2.80%
37	1+969.99m	End Normal Crown	-2.00%	-2.00%	44	2+441.01m	Begin Normal Crown	-2.00%	-2.00%	52	2+834.35m	Level Crown	-2.00%	0.00%	60	3+268.29m	Reverse Crown	-2.00%	2.00%
37	1+979.46m	Level Crown	-2.00%	0.00%	45	2+404.63m	End Normal Crown	-2.00%	-2.00%	52	2+843.85m	Begin Normal Crown	-2.00%	-2.00%	60	3+277.57m	Level Crown	-2.00%	0.00%
37	1+988.94m	Reverse Crown	-2.00%	2.00%	45	2+414.27m	Level Crown	-2.00%	0.00%	53	2+838.60m	End Normal Crown	-2.00%	-2.00%	60	3+286.86m	Begin Normal Crown	-2.00%	-2.00%
37	1+997.46m	Begin Full Super	-3.80%	3.80%	45	2+423.91m	Reverse Crown	-2.00%	2.00%	53	2+847.89m	Level Crown	-2.00%	0.00%	61	3+284.90m	End Normal Crown	-2.00%	-2.00%
37	2+021.37m	End Full Super	-3.80%	3.80%	45	2+441.27m	Begin Full Super	-5.60%	5.60%	53	2+857.17m	Reverse Crown	-2.00%	2.00%	61	3+294.18m	Level Crown	-2.00%	0.00%
37	2+029.90m	Reverse Crown	-2.00%	2.00%	45	2+442.30m	End Full Super	-5.60%	5.60%	53	2+860.89m	Begin Full Super	-2.80%	2.80%	61	3+303.47m	Reverse Crown	-2.00%	2.00%
37	2+039.37m	Level Crown	-2.00%	0.00%	45	2+459.66m	Reverse Crown	-2.00%	2.00%	53	2+870.46m	End Full Super	-2.80%	2.80%	61	3+307.18m	Begin Full Super	-2.80%	2.80%
37	2+048.84m	Begin Normal Crown	-2.00%	-2.00%	45	2+469.30m	Level Crown	-2.00%	0.00%	53	2+874.18m	Reverse Crown	-2.00%	2.00%	61	3+311.96m	End Full Super	-2.80%	2.80%
38	2+024.49m	End Normal Crown	-2.00%	-2.00%	45	2+478.94m	Begin Normal Crown	-2.00%	-2.00%	53	2+883.46m	Level Crown	-2.00%	0.00%	61	3+315.68m	Reverse Crown	-2.00%	2.00%
38	2+034.07m	Level Crown	-2.00%	0.00%	46	2+462.91m	End Normal Crown	-2.00%	-2.00%	53	2+892.75m	Begin Normal Crown	-2.00%	-2.00%	61	3+324.96m	Level Crown	-2.00%	0.00%
38	2+043.66m	Reverse Crown	-2.00%	2.00%	46	2+472.19m	Level Crown	0.00%	-2.00%	54	2+877.72m	End Normal Crown	-2.00%	-2.00%	61	3+334.25m	Begin Normal Crown	-2.00%	-2.00%
38	2+057.07m	Begin Full Super	-4.80%	4.80%	46	2+481.48m	Reverse Crown	2.00%	-2.00%	54	2+887.00m	Level Crown	-2.00%	0.00%	62	3+303.98m	End Normal Crown	-2.00%	-2.00%
38	2+079.74m	End Full Super	-4.80%	4.80%	46	2+485.19m	Begin Full Super	2.80%	-2.80%	54	2+896.29m	Reverse Crown	-2.00%	2.00%	62	3+313.42m	Level Crown	-2.00%	0.00%
38	2+093.16m	Reverse Crown	-2.00%	2.00%	46	2+519.05m	End Full Super	2.80%	-2.80%	54	2+900.00m	Begin Full Super	-2.80%	2.80%	62	3+322.87m	Reverse Crown	-2.00%	2.00%
38	2+102.74m	Level Crown	-2.00%	0.00%	46	2+522.76m	Reverse Crown	2.00%	-2.00%	54	2+918.06m	End Full Super	-2.80%	2.80%	62	3+330.42m	Begin Full Super	-3.60%	3.60%
38	2+112.33m	Begin Normal Crown	-2.00%	-2.00%	46	2+532.05m	Level Crown	0.00%	-2.00%	54	2+921.77m	Reverse Crown	-2.00%	2.00%	62	3+343.82m	End Full Super	-3.60%	3.60%
39	2+071.43m	End Normal Crown	-2.00%	-2.00%	46	2+541.33m	Begin Normal Crown	-2.00%	-2.00%	54	2+931.06m	Level Crown	-2.00%	0.00%	62	3+351.38m	Reverse Crown	-2.00%	2.00%
39	2+081.04m	Level Crown	0.00%	-2.00%	47	2+509.53m	End Normal Crown	-2.00%	-2.00%	54	2+940.34m	Begin Normal Crown	-2.00%	-2.00%	62	3+360.82m	Level Crown	-2.00%	0.00%
39	2+090.66m	Reverse Crown	2.00%	-2.00%	47	2+519.11m	Level Crown	0.00%	-2.00%	55	2+917.09m	End Normal Crown	-2.00%	-2.00%	62	3+370.27m	Begin Normal Crown	-2.00%	-2.00%
39	2+105.83m	End Full Super	5.20%	-5.20%	47	2+528.69m	Reverse Crown	2.00%	-2.00%	55	2+926.63m	Level Crown	-2.00%	0.00%	63	3+342.52m	End Normal Crown	-2.00%	-2.00%
39	2+106.04m	Begin Full Super	5.20%	-5.20%	47	2+542.11m	Begin Full Super	4.80%	-4.80%	55	2+936.18m	Reverse Crown	-2.00%	2.00%	63	3+352.12m	Level Crown	0.00%	-2.00%
39	2+121.21m	Reverse Crown	2.00%	-2.00%	47	2+551.24m	End Full Super	4.80%	-4.80%	55	2+947.63m	Begin Full Super	-4.40%	4.40%	63	3+361.72m	Reverse Crown	2.00%	-2.00%
39	2+130.83m	Level Crown	0.00%	-2.00%	47	2+564.65m	Reverse Crown	2.00%	-2.00%	55	2+961.37m	End Full Super	-4.40%	4.40%	63	3+376.12m	Begin Full Super	5.00%	-5.00%
39	2+140.44m	Begin Normal Crown	-2.00%	-2.00%	47	2+574.24m	Level Crown	0.00%	-2.00%	55	2+972.83m	Reverse Crown	-2.00%	2.00%	63	3+388.91m	End Full Super	5.00%	-5.00%
40	2+119.75m	End Normal Crown	-2.00%	-2.00%	47	2+583.82m	Begin Normal Crown	-2.00%	-2.00%	55	2+982.37m	Level Crown	-2.00%	0.00%	63	3+403.31m	Reverse Crown	2.00%	-2.00%
40	2+129.27m	Level Crown	0.00%	-2.00%	48	2+533.34m	End Normal Crown	-2.00%	-2.00%	55	2+991.92m	Begin Normal Crown	-2.00%	-2.00%	63	3+412.91m	Level Crown	0.00%	-2.00%

KHYBER PAKHTUNKHWA INTEGRATED TOURISM AND ENTERPRISE DEVELOPMENT PROJECT
C&W DEPARTMENT, KP

NATIONAL ENGINEERING SERVICES PAKISTAN (PVT.) LTD.

REV.	DATE	DESCRIPTION	APPROVED

DRAWN
SUBMITTED
RECOMMENDED
CHD./VER.
APPROVED

PROJECT: UPGRADATION OF MANKIAL BADA SERI ROAD SWAT

TITLE: SUPERELEVATION SCHEME

DATE: JANUARY 2021

DWG NO. 4169/(iii)/TD SS002

Superelevation Region	Station	Description	Left Outside Lane	Right Outside Lane	Superelevation Region	Station	Description	Left Outside Lane	Right Outside Lane	Superelevation Region	Station	Description	Left Outside Lane	Right Outside Lane	Superelevation Region	Station	Description	Left Outside Lane	Right Outside Lane
63	3+422.51m	Begin Normal Crown	-2.00%	-2.00%	71	4+024.75m	Level Crown	0.00%	-2.00%	79	4+494.17m	Reverse Crown	2.00%	-2.00%	87	4+796.95m	End Full Super	-6.00%	6.00%
64	3+383.75m	End Normal Crown	-2.00%	-2.00%	71	4+034.13m	Begin Normal Crown	-2.00%	-2.00%	79	4+504.17m	Level Crown	0.00%	-2.00%	87	4+816.28m	Reverse Crown	-2.00%	2.00%
64	3+393.03m	Level Crown	-2.00%	0.00%	72	4+012.91m	End Normal Crown	-2.00%	-2.00%	79	4+514.17m	Begin Normal Crown	-2.00%	-2.00%	87	4+825.95m	Level Crown	-2.00%	0.00%
64	3+402.32m	Reverse Crown	-2.00%	2.00%	72	4+022.41m	Level Crown	-2.00%	0.00%	80	4+486.37m	End Normal Crown	-2.00%	-2.00%	87	4+835.61m	Begin Normal Crown	-2.00%	-2.00%
64	3+406.03m	Begin Full Super	-2.80%	2.80%	72	4+031.91m	Reverse Crown	-2.00%	2.00%	80	4+495.94m	Level Crown	0.00%	-2.00%	88	4+792.34m	End Normal Crown	-2.00%	-2.00%
64	3+412.77m	End Full Super	-2.80%	2.80%	72	4+041.41m	Begin Full Super	-4.00%	4.00%	80	4+505.50m	Reverse Crown	2.00%	-2.00%	88	4+802.00m	Level Crown	0.00%	-2.00%
64	3+416.48m	Reverse Crown	-2.00%	2.00%	72	4+067.02m	End Full Super	-4.00%	4.00%	80	4+517.46m	End Full Super	4.60%	-4.60%	88	4+811.67m	Reverse Crown	2.00%	-2.00%
64	3+425.77m	Level Crown	-2.00%	0.00%	72	4+076.52m	Reverse Crown	-2.00%	2.00%	80	4+517.94m	Begin Full Super	4.60%	-4.60%	88	4+829.72m	End Full Super	6.00%	-6.00%
64	3+435.05m	Begin Normal Crown	-2.00%	-2.00%	72	4+086.02m	Level Crown	-2.00%	0.00%	80	4+529.90m	Reverse Crown	2.00%	-2.00%	88	4+831.00m	Begin Full Super	6.00%	-6.00%
65	3+474.43m	End Normal Crown	-2.00%	-2.00%	72	4+095.52m	Begin Normal Crown	-2.00%	-2.00%	80	4+539.46m	Level Crown	0.00%	-2.00%	88	4+849.05m	Reverse Crown	2.00%	-2.00%
65	3+483.72m	Level Crown	-2.00%	0.00%	73	4+064.16m	End Normal Crown	-2.00%	-2.00%	80	4+549.03m	Begin Normal Crown	-2.00%	-2.00%	88	4+858.72m	Level Crown	0.00%	-2.00%
65	3+493.00m	Reverse Crown	-2.00%	2.00%	73	4+073.82m	Level Crown	0.00%	-2.00%	81	4+506.60m	End Normal Crown	-2.00%	-2.00%	88	4+868.39m	Begin Normal Crown	-2.00%	-2.00%
65	3+496.72m	Begin Full Super	-2.80%	2.80%	73	4+083.49m	Reverse Crown	2.00%	-2.00%	81	4+516.14m	Level Crown	-2.00%	0.00%	89	4+847.95m	End Normal Crown	-2.00%	-2.00%
65	3+543.87m	End Full Super	-2.80%	2.80%	73	4+102.82m	Begin Full Super	6.00%	-6.00%	81	4+525.69m	Reverse Crown	-2.00%	2.00%	89	4+857.37m	Level Crown	-2.00%	0.00%
65	3+547.58m	Reverse Crown	-2.00%	2.00%	73	4+126.36m	End Full Super	6.00%	-6.00%	81	4+537.14m	Begin Full Super	-4.40%	4.40%	89	4+866.78m	Reverse Crown	-2.00%	2.00%
65	3+556.87m	Level Crown	-2.00%	0.00%	73	4+145.69m	Reverse Crown	2.00%	-2.00%	81	4+542.86m	End Full Super	-4.40%	4.40%	89	4+873.37m	Begin Full Super	-3.40%	3.40%
65	3+566.16m	Begin Normal Crown	-2.00%	-2.00%	73	4+155.36m	Level Crown	0.00%	-2.00%	81	4+554.32m	Reverse Crown	-2.00%	2.00%	89	4+902.41m	End Full Super	-3.40%	3.40%
66	3+550.73m	End Normal Crown	-2.00%	-2.00%	73	4+165.03m	Begin Normal Crown	-2.00%	-2.00%	81	4+563.86m	Level Crown	-2.00%	0.00%	89	4+909.00m	Reverse Crown	-2.00%	2.00%
66	3+560.15m	Level Crown	0.00%	-2.00%	74	4+132.91m	End Normal Crown	-2.00%	-2.00%	81	4+573.41m	Begin Normal Crown	-2.00%	-2.00%	89	4+918.41m	Level Crown	-2.00%	0.00%
66	3+569.56m	Reverse Crown	2.00%	-2.00%	74	4+142.57m	Level Crown	-2.00%	0.00%	82	4+541.84m	End Normal Crown	-2.00%	-2.00%	89	4+927.82m	Begin Normal Crown	-2.00%	-2.00%
66	3+576.15m	Begin Full Super	3.40%	-3.40%	74	4+152.24m	Reverse Crown	-2.00%	2.00%	82	4+551.34m	Level Crown	0.00%	-2.00%	90	4+883.59m	End Normal Crown	-2.00%	-2.00%
66	3+616.76m	End Full Super	3.40%	-3.40%	74	4+171.57m	Begin Full Super	-6.00%	6.00%	82	4+560.84m	Reverse Crown	2.00%	-2.00%	90	4+893.26m	Level Crown	0.00%	-2.00%
66	3+623.35m	Reverse Crown	2.00%	-2.00%	74	4+178.97m	End Full Super	-6.00%	6.00%	82	4+570.34m	Begin Full Super	4.00%	-4.00%	90	4+902.93m	Reverse Crown	2.00%	-2.00%
66	3+632.76m	Level Crown	0.00%	-2.00%	74	4+198.30m	Reverse Crown	-2.00%	2.00%	82	4+593.40m	End Full Super	4.00%	-4.00%	90	4+917.13m	End Full Super	6.00%	-6.00%
66	3+642.17m	Begin Normal Crown	-2.00%	-2.00%	74	4+207.97m	Level Crown	-2.00%	0.00%	82	4+602.90m	Reverse Crown	2.00%	-2.00%	90	4+922.26m	Begin Full Super	6.00%	-6.00%
67	3+706.27m	End Normal Crown	-2.00%	-2.00%	74	4+217.64m	Begin Normal Crown	-2.00%	-2.00%	82	4+612.40m	Level Crown	0.00%	-2.00%	90	4+936.46m	Reverse Crown	2.00%	-2.00%
67	3+715.56m	Level Crown	-2.00%	0.00%	75	4+209.76m	End Normal Crown	-2.00%	-2.00%	82	4+621.90m	Begin Normal Crown	-2.00%	-2.00%	90	4+946.13m	Level Crown	0.00%	-2.00%
67	3+724.85m	Reverse Crown	-2.00%	2.00%	75	4+219.28m	Level Crown	0.00%	-2.00%	83	4+583.97m	End Normal Crown	-2.00%	-2.00%	90	4+955.79m	Begin Normal Crown	-2.00%	-2.00%
67	3+728.56m	Begin Full Super	-2.80%	2.80%	75	4+228.81m	Reverse Crown	2.00%	-2.00%	83	4+593.55m	Level Crown	-2.00%	0.00%	91	4+912.88m	End Normal Crown	-2.00%	-2.00%
67	3+744.13m	End Full Super	-2.80%	2.80%	75	4+239.28m	Begin Full Super	4.20%	-4.20%	83	4+603.13m	Reverse Crown	-2.00%	2.00%	91	4+922.40m	Level Crown	-2.00%	0.00%
67	3+747.84m	Reverse Crown	-2.00%	2.00%	75	4+260.53m	End Full Super	4.20%	-4.20%	83	4+616.55m	Begin Full Super	-4.80%	4.80%	91	4+931.93m	Reverse Crown	-2.00%	2.00%
67	3+757.13m	Level Crown	-2.00%	0.00%	75	4+271.01m	Reverse Crown	2.00%	-2.00%	83	4+617.74m	End Full Super	-4.80%	4.80%	91	4+942.40m	Begin Full Super	-4.20%	4.20%
67	3+766.41m	Begin Normal Crown	-2.00%	-2.00%	75	4+280.53m	Level Crown	0.00%	-2.00%	83	4+631.15m	Reverse Crown	-2.00%	2.00%	91	4+948.66m	End Full Super	-4.20%	4.20%
68	3+770.67m	End Normal Crown	-2.00%	-2.00%	75	4+290.05m	Begin Normal Crown	-2.00%	-2.00%	83	4+640.74m	Level Crown	-2.00%	0.00%	91	4+959.13m	Reverse Crown	-2.00%	2.00%
68	3+780.11m	Level Crown	0.00%	-2.00%	76	4+279.70m	End Normal Crown	-2.00%	-2.00%	83	4+650.32m	Begin Normal Crown	-2.00%	-2.00%	91	4+968.66m	Level Crown	-2.00%	0.00%
68	3+789.56m	Reverse Crown	2.00%	-2.00%	76	4+289.30m	Level Crown	-2.00%	0.00%	84	4+599.64m	End Normal Crown	-2.00%	-2.00%	91	4+978.18m	Begin Normal Crown	-2.00%	-2.00%
68	3+797.11m	Begin Full Super	3.60%	-3.60%	76	4+298.90m	Reverse Crown	-2.00%	2.00%	84	4+609.25m	Level Crown	0.00%	-2.00%	92	4+943.52m	End Normal Crown	-2.00%	-2.00%
68	3+806.37m	End Full Super	3.60%	-3.60%	76	4+313.30m	Begin Full Super	-5.00%	5.00%	84	4+618.87m	Reverse Crown	2.00%	-2.00%	92	4+952.81m	Level Crown	0.00%	-2.00%
68	3+813.93m	Reverse Crown	2.00%	-2.00%	76	4+332.79m	End Full Super	-5.00%	5.00%	84	4+634.25m	Begin Full Super	5.20%	-5.20%	92	4+962.09m	Reverse Crown	2.00%	-2.00%
68	3+823.37m	Level Crown	0.00%	-2.00%	76	4+347.19m	Reverse Crown	-2.00%	2.00%	84	4+634.70m	End Full Super	5.20%	-5.20%	92	4+965.81m	Begin Full Super	2.80%	-2.80%
68	3+832.82m	Begin Normal Crown	-2.00%	-2.00%	76	4+356.79m	Level Crown	-2.00%	0.00%	84	4+650.08m	Reverse Crown	2.00%	-2.00%	92	4+979.57m	End Full Super	2.80%	-2.80%
69	3+797.88m	End Normal Crown	-2.00%	-2.00%	76	4+366.39m	Begin Normal Crown	-2.00%	-2.00%	84	4+659.70m	Level Crown	0.00%	-2.00%	92	4+983.28m	Reverse Crown	2.00%	-2.00%
69	3+807.48m	Level Crown	-2.00%	0.00%	77	4+342.11m	End Normal Crown	-2.00%	-2.00%	84	4+669.32m	Begin Normal Crown	-2.00%	-2.00%	92	4+992.57m	Level Crown	0.00%	-2.00%
69	3+817.08m	Reverse Crown	-2.00%	2.00%	77	4+351.61m	Level Crown	0.00%	-2.00%	85	4+651.99m	End Normal Crown	-2.00%	-2.00%	92	5+001.85m	Begin Normal Crown	-2.00%	-2.00%
69	3+831.48m	Begin Full Super	-5.00%	5.00%	77	4+361.11m	Reverse Crown	2.00%	-2.00%	85	4+661.36m	Level Crown	-2.00%	0.00%	93	5+026.39m	End Normal Crown	-2.00%	-2.00%
69	3+845.81m	End Full Super	-5.00%	5.00%	77	4+370.61m	Begin Full Super	4.00%	-4.00%	85	4+670.74m	Reverse Crown	-2.00%	2.00%	93	5+036.39m	Level Crown	0.00%	-2.00%
69	3+860.21m	Reverse Crown	-2.00%	2.00%	77	4+373.92m	End Full Super	4.00%	-4.00%	85	4+676.36m	Begin Full Super	-3.20%	3.20%	93	5+046.39m	Reverse Crown	2.00%	-2.00%
69	3+869.81m	Level Crown	-2.00%	0.00%	77	4+383.42m	Reverse Crown	2.00%	-2.00%	85	4+706.53m	End Full Super	-3.20%	3.20%	93	5+047.39m	Begin Full Super	2.20%	-2.20%
69	3+879.41m	Begin Normal Crown	-2.00%	-2.00%	77	4+392.92m	Level Crown	0.00%	-2.00%	85	4+712.15m	Reverse Crown	-2.00%	2.00%	93	5+089.61m	End Full Super	2.20%	-2.20%
70	3+900.47m	End Normal Crown	-2.00%	-2.00%	77	4+402.42m	Begin Normal Crown	-2.00%	-2.00%	85	4+721.53m	Level Crown	-2.00%	0.00%	93	5+090.61m	Reverse Crown	2.00%	-2.00%
70	3+910.02m	Level Crown	0.00%	-2.00%	78	4+364.15m	End Normal Crown	-2.00%	-2.00%	85	4+730.90m	Begin Normal Crown	-2.00%	-2.00%	93	5+100.61m	Level Crown	0.00%	-2.00%
70	3+919.56m	Reverse Crown	2.00%	-2.00%	78	4+373.68m	Level Crown	-2.00%	0.00%	86	4+702.65m	End Normal Crown	-2.00%	-2.00%	93	5+110.61m	Begin Normal Crown	-2.00%	-2.00%
70	3+931.02m	Begin Full Super	4.40%	-4.40%	78	4+383.20m	Reverse Crown	-2.00%	2.00%	86	4+711.93m	Level Crown	-2.00%	0.00%	94	5+123.02m	End Normal Crown	-2.00%	-2.00%
70	3+944.97m	End Full Super	4.40%	-4.40%	78	4+393.68m	Begin Full Super	-4.20%	4.20%	86	4+721.22m	Reverse Crown	-2.00%	2.00%	94	5+132.58m	Level Crown	0.00%	-2.00%
70	3+956.43m	Reverse Crown	2.00%	-2.00%	78	4+426.21m	End Full Super	-4.20%	4.20%	86	4+724.93m	Begin Full Super	-2.80%	2.80%	94	5+142.15m	Reverse Crown	2.00%	-2.00%
70	3+965.97m	Level Crown	0.00%	-2.00%	78	4+436.69m	Reverse Crown	-2.00%	2.00%	86	4+766.31m	End Full Super	-2.80%	2.80%	94	5+154.58m	Begin Full Super	4.60%	-4.60%
70	3+975.52m	Begin Normal Crown	-2.00%	-2.00%	78	4+446.21m	Level Crown	-2.00%	0.00%	86	4+770.02m	Reverse Crown	-2.00%	2.00%	94	5+179.39m	End Full Super	4.60%	-4.60%
71	3+953.93m	End Normal Crown	-2.00%	-2.00%	78	4+455.74m	Begin Normal Crown	-2.00%	-2.00%	86	4+779.31m	Level Crown	-2.00%	0.00%	94	5+191.82m	Reverse Crown	2.00%	-2.00%
71	3+963.31m	Level Crown	0.00%	-2.00%	79	4+436.22m	End Normal Crown	-2.00%	-2.00%	86	4+788.59m	Begin Normal Crown	-2.00%	-2.00%	94	5+201.39m	Level Crown	0.00%	-2.00%
71	3+972.68m	Reverse Crown	2.00%	-2.00%	79	4+446.22m	Level Crown	0.00%	-2.00%	87	4+755.54m	End Normal Crown	-2.00%	-2.00%	94	5+210.95m	Begin Normal Crown	-2.00%	-2.00%
71	3+978.31m	Begin Full Super	3.20%	-3.20%	79	4+456.22m	Begin Full Super	2.00%	-2.00%	87	4+765.21m	Level Crown	-2.00%	0.00%	95	5+282.29m	End Normal Crown	-2.00%	-2.00%
71	4+009.75m	End Full Super	3.20%	-3.20%	79	4+456.22m	Reverse Crown	2.00%	-2.00%	87	4+774.88m	Reverse Crown	-2.00%	2.00%	95	5+291.62m	Level Crown	-2.00%	0.00%
71	4+015.38m	Reverse Crown	2.00%	-2.00%	79	4+494.17m	End Full Super	2.00%	-2.00%	87	4+794.21m	Begin Full Super	-6.00%	6.00%	95	5+300.96m	Reverse Crown	-2.00%	2.00%

KHYBER PAKHTUNKHWA INTEGRATED TOURISM AND ENTERPRISE DEVELOPMENT PROJECT
C&W DEPARTMENT, KP

NATIONAL ENGINEERING SERVICES PAKISTAN (PVT.) LTD.

REV.	DATE	DESCRIPTION	APPROVED

DRAWN
SUBMITTED
RECOMMENDED
CHD./VER.
APPROVED

PROJECT:
UPGRADATION OF MANKIAL BADA SERI ROAD SWAT

TITLE
SUPERELEVATION SCHEME

DATE
JANUARY 2021

DWG NO.
4169/(iii)/TD SS003

Superelevation Region	Station	Description	Left Outside Lane	Right Outside Lane	Superelevation Region	Station	Description	Left Outside Lane	Right Outside Lane	Superelevation Region	Station	Description	Left Outside Lane	Right Outside Lane	Superelevation Region	Station	Description	Left Outside Lane	Right Outside Lane
95	5+305.62m	Begin Full Super	-3.00%	3.00%	103	5+687.12m	Reverse Crown	-2.00%	2.00%	111	6+239.47m	Level Crown	0.00%	-2.00%	119	6+609.11m	End Normal Crown	-2.00%	-2.00%
95	5+336.31m	End Full Super	-3.00%	3.00%	103	5+706.46m	Begin Full Super	-6.00%	6.00%	111	6+249.13m	Reverse Crown	2.00%	-2.00%	119	6+618.56m	Level Crown	0.00%	-2.00%
95	5+340.98m	Reverse Crown	-2.00%	2.00%	103	5+729.55m	End Full Super	-6.00%	6.00%	111	6+267.47m	Begin Full Super	5.80%	-5.80%	119	6+628.00m	Reverse Crown	2.00%	-2.00%
95	5+350.31m	Level Crown	-2.00%	0.00%	103	5+748.88m	Reverse Crown	-2.00%	2.00%	111	6+271.72m	End Full Super	5.80%	-5.80%	119	6+635.56m	Begin Full Super	3.60%	-3.60%
95	5+359.64m	Begin Normal Crown	-2.00%	-2.00%	103	5+758.55m	Level Crown	-2.00%	0.00%	111	6+290.07m	Reverse Crown	2.00%	-2.00%	119	6+650.80m	End Full Super	3.60%	-3.60%
96	5+344.15m	End Normal Crown	-2.00%	-2.00%	103	5+768.22m	Begin Normal Crown	-2.00%	-2.00%	111	6+299.72m	Level Crown	0.00%	-2.00%	119	6+658.35m	Reverse Crown	2.00%	-2.00%
96	5+353.73m	Level Crown	-2.00%	0.00%	104	5+736.73m	End Normal Crown	-2.00%	-2.00%	111	6+309.38m	Begin Normal Crown	-2.00%	-2.00%	119	6+667.80m	Level Crown	0.00%	-2.00%
96	5+363.32m	Reverse Crown	-2.00%	2.00%	104	5+746.17m	Level Crown	-2.00%	0.00%	112	6+260.91m	End Normal Crown	-2.00%	-2.00%	119	6+677.24m	Begin Normal Crown	-2.00%	-2.00%
96	5+376.73m	Begin Full Super	-4.80%	4.80%	104	5+755.62m	Reverse Crown	-2.00%	2.00%	112	6+270.49m	Level Crown	-2.00%	0.00%	120	6+684.97m	End Normal Crown	-2.00%	-2.00%
96	5+392.46m	End Full Super	-4.80%	4.80%	104	5+763.17m	Begin Full Super	-3.60%	3.60%	112	6+280.08m	Reverse Crown	-2.00%	2.00%	120	6+694.45m	Level Crown	0.00%	-2.00%
96	5+405.87m	Reverse Crown	-2.00%	2.00%	104	5+773.76m	End Full Super	-3.60%	3.60%	112	6+293.49m	Begin Full Super	-4.80%	4.80%	120	6+703.92m	Reverse Crown	2.00%	-2.00%
96	5+415.46m	Level Crown	-2.00%	0.00%	104	5+781.32m	Reverse Crown	-2.00%	2.00%	112	6+304.78m	End Full Super	-4.80%	4.80%	120	6+712.45m	Begin Full Super	3.80%	-3.80%
96	5+425.04m	Begin Normal Crown	-2.00%	-2.00%	104	5+790.76m	Level Crown	-2.00%	0.00%	112	6+318.19m	Reverse Crown	-2.00%	2.00%	120	6+757.31m	End Full Super	3.80%	-3.80%
97	5+427.70m	End Normal Crown	-2.00%	-2.00%	104	5+800.20m	Begin Normal Crown	-2.00%	-2.00%	112	6+327.78m	Level Crown	-2.00%	0.00%	120	6+765.84m	Reverse Crown	2.00%	-2.00%
97	5+436.99m	Level Crown	0.00%	-2.00%	105	5+791.47m	End Normal Crown	-2.00%	-2.00%	112	6+337.36m	Begin Normal Crown	-2.00%	-2.00%	120	6+775.31m	Level Crown	0.00%	-2.00%
97	5+446.27m	Reverse Crown	2.00%	-2.00%	105	5+800.97m	Level Crown	0.00%	-2.00%	113	6+306.93m	End Normal Crown	-2.00%	-2.00%	120	6+784.79m	Begin Normal Crown	-2.00%	-2.00%
97	5+449.99m	Begin Full Super	2.80%	-2.80%	105	5+810.47m	Reverse Crown	2.00%	-2.00%	113	6+316.48m	Level Crown	0.00%	-2.00%	121	6+745.13m	End Normal Crown	-2.00%	-2.00%
97	5+488.48m	End Full Super	2.80%	-2.80%	105	5+819.97m	Begin Full Super	4.00%	-4.00%	113	6+326.02m	Reverse Crown	2.00%	-2.00%	121	6+754.71m	Level Crown	-2.00%	0.00%
97	5+492.19m	Reverse Crown	2.00%	-2.00%	105	5+840.90m	End Full Super	4.00%	-4.00%	113	6+337.48m	Begin Full Super	4.40%	-4.40%	121	6+764.29m	Reverse Crown	-2.00%	2.00%
97	5+501.48m	Level Crown	0.00%	-2.00%	105	5+850.40m	Reverse Crown	2.00%	-2.00%	113	6+340.38m	End Full Super	4.40%	-4.40%	121	6+777.71m	Begin Full Super	-4.80%	4.80%
97	5+510.76m	Begin Normal Crown	-2.00%	-2.00%	105	5+859.90m	Level Crown	0.00%	-2.00%	113	6+351.84m	Reverse Crown	2.00%	-2.00%	121	6+808.52m	End Full Super	-4.80%	4.80%
98	5+497.67m	End Normal Crown	-2.00%	-2.00%	105	5+869.40m	Begin Normal Crown	-2.00%	-2.00%	113	6+361.38m	Level Crown	0.00%	-2.00%	121	6+821.94m	Reverse Crown	-2.00%	2.00%
98	5+507.34m	Level Crown	0.00%	-2.00%	106	5+839.46m	End Normal Crown	-2.00%	-2.00%	113	6+370.93m	Begin Normal Crown	-2.00%	-2.00%	121	6+831.52m	Level Crown	-2.00%	0.00%
98	5+517.01m	Reverse Crown	2.00%	-2.00%	106	5+848.90m	Level Crown	-2.00%	0.00%	114	6+323.96m	End Normal Crown	-2.00%	-2.00%	121	6+841.11m	Begin Normal Crown	-2.00%	-2.00%
98	5+536.34m	Begin Full Super	6.00%	-6.00%	106	5+858.35m	Reverse Crown	-2.00%	2.00%	114	6+333.62m	Level Crown	0.00%	-2.00%	122	6+794.41m	End Normal Crown	-2.00%	-2.00%
98	5+537.54m	End Full Super	6.00%	-6.00%	106	5+865.90m	Begin Full Super	-3.60%	3.60%	114	6+343.29m	Reverse Crown	2.00%	-2.00%	122	6+804.05m	Level Crown	0.00%	-2.00%
98	5+556.88m	Reverse Crown	2.00%	-2.00%	106	5+893.30m	End Full Super	-3.60%	3.60%	114	6+362.62m	Begin Full Super	6.00%	-6.00%	122	6+813.69m	Reverse Crown	2.00%	-2.00%
98	5+566.54m	Level Crown	0.00%	-2.00%	106	5+900.86m	Reverse Crown	-2.00%	2.00%	114	6+362.87m	End Full Super	6.00%	-6.00%	122	6+831.05m	Begin Full Super	5.60%	-5.60%
98	5+576.21m	Begin Normal Crown	-2.00%	-2.00%	106	5+910.30m	Level Crown	-2.00%	0.00%	114	6+382.20m	Reverse Crown	2.00%	-2.00%	122	6+834.10m	End Full Super	5.60%	-5.60%
99	5+524.52m	End Normal Crown	-2.00%	-2.00%	106	5+919.75m	Begin Normal Crown	-2.00%	-2.00%	114	6+391.87m	Level Crown	0.00%	-2.00%	122	6+851.46m	Reverse Crown	2.00%	-2.00%
99	5+534.07m	Level Crown	-2.00%	0.00%	107	5+882.12m	End Normal Crown	-2.00%	-2.00%	114	6+401.53m	Begin Normal Crown	-2.00%	-2.00%	122	6+861.10m	Level Crown	0.00%	-2.00%
99	5+543.61m	Reverse Crown	-2.00%	2.00%	107	5+891.64m	Level Crown	0.00%	-2.00%	115	6+409.34m	End Normal Crown	-2.00%	-2.00%	122	6+870.75m	Begin Normal Crown	-2.00%	-2.00%
99	5+555.07m	Begin Full Super	-4.40%	4.40%	107	5+901.16m	Reverse Crown	2.00%	-2.00%	115	6+418.82m	Level Crown	-2.00%	0.00%	123	6+867.69m	End Normal Crown	-2.00%	-2.00%
99	5+568.17m	End Full Super	-4.40%	4.40%	107	5+911.64m	Begin Full Super	4.20%	-4.20%	115	6+428.29m	Reverse Crown	-2.00%	2.00%	123	6+877.17m	Level Crown	-2.00%	0.00%
99	5+579.62m	Reverse Crown	-2.00%	2.00%	107	5+936.37m	End Full Super	4.20%	-4.20%	115	6+436.82m	Begin Full Super	-3.80%	3.80%	123	6+886.64m	Reverse Crown	-2.00%	2.00%
99	5+589.17m	Level Crown	-2.00%	0.00%	107	5+946.84m	Reverse Crown	2.00%	-2.00%	115	6+454.29m	End Full Super	-3.80%	3.80%	123	6+895.17m	Begin Full Super	-3.80%	3.80%
99	5+598.71m	Begin Normal Crown	-2.00%	-2.00%	107	5+956.37m	Level Crown	0.00%	-2.00%	115	6+462.82m	Reverse Crown	-2.00%	2.00%	123	6+910.56m	End Full Super	-3.80%	3.80%
100	5+562.66m	End Normal Crown	-2.00%	-2.00%	107	5+965.89m	Begin Normal Crown	-2.00%	-2.00%	115	6+472.29m	Level Crown	-2.00%	0.00%	123	6+919.08m	Reverse Crown	-2.00%	2.00%
100	5+572.32m	Level Crown	0.00%	-2.00%	108	5+944.33m	End Normal Crown	-2.00%	-2.00%	115	6+481.77m	Begin Normal Crown	-2.00%	-2.00%	123	6+928.56m	Level Crown	-2.00%	0.00%
100	5+581.99m	Reverse Crown	2.00%	-2.00%	108	5+953.74m	Level Crown	0.00%	-2.00%	116	6+440.91m	End Normal Crown	-2.00%	-2.00%	123	6+938.03m	Begin Normal Crown	-2.00%	-2.00%
100	5+601.32m	Begin Full Super	6.00%	-6.00%	108	5+963.15m	Reverse Crown	2.00%	-2.00%	116	6+450.55m	Level Crown	-2.00%	0.00%	124	6+909.39m	End Normal Crown	-2.00%	-2.00%
100	5+607.15m	End Full Super	6.00%	-6.00%	108	5+969.74m	Begin Full Super	3.40%	-3.40%	116	6+460.20m	Reverse Crown	-2.00%	2.00%	124	6+919.03m	Level Crown	-2.00%	0.00%
100	5+626.49m	Reverse Crown	2.00%	-2.00%	108	6+005.92m	End Full Super	3.40%	-3.40%	116	6+477.55m	Begin Full Super	-5.60%	5.60%	124	6+928.67m	Reverse Crown	-2.00%	2.00%
100	5+636.15m	Level Crown	0.00%	-2.00%	108	6+012.51m	Reverse Crown	2.00%	-2.00%	116	6+489.37m	End Full Super	-5.60%	5.60%	124	6+946.03m	Begin Full Super	-5.60%	5.60%
100	5+645.82m	Begin Normal Crown	-2.00%	-2.00%	108	6+021.92m	Level Crown	0.00%	-2.00%	116	6+506.72m	Reverse Crown	-2.00%	2.00%	124	6+946.42m	End Full Super	-5.60%	5.60%
101	5+605.71m	End Normal Crown	-2.00%	-2.00%	108	6+031.34m	Begin Normal Crown	-2.00%	-2.00%	116	6+516.37m	Level Crown	-2.00%	0.00%	124	6+963.78m	Reverse Crown	-2.00%	2.00%
101	5+615.37m	Level Crown	0.00%	-2.00%	109	5+997.16m	End Normal Crown	-2.00%	-2.00%	116	6+526.01m	Begin Normal Crown	-2.00%	-2.00%	124	6+973.42m	Level Crown	-2.00%	0.00%
101	5+625.04m	Reverse Crown	2.00%	-2.00%	109	6+006.66m	Level Crown	-2.00%	0.00%	117	6+497.26m	End Normal Crown	-2.00%	-2.00%	124	6+983.06m	Begin Normal Crown	-2.00%	-2.00%
101	5+644.37m	Begin Full Super	6.00%	-6.00%	109	6+016.16m	Reverse Crown	-2.00%	2.00%	117	6+506.70m	Level Crown	0.00%	-2.00%	125	6+928.29m	End Normal Crown	-2.00%	-2.00%
101	5+657.48m	End Full Super	6.00%	-6.00%	109	6+025.66m	Begin Full Super	-4.00%	4.00%	117	6+516.15m	Reverse Crown	2.00%	-2.00%	125	6+937.94m	Level Crown	0.00%	-2.00%
101	5+676.81m	Reverse Crown	2.00%	-2.00%	109	6+092.45m	End Full Super	-4.00%	4.00%	117	6+523.70m	Begin Full Super	3.60%	-3.60%	125	6+947.58m	Reverse Crown	2.00%	-2.00%
101	5+686.48m	Level Crown	0.00%	-2.00%	109	6+101.95m	Reverse Crown	-2.00%	2.00%	117	6+544.13m	End Full Super	3.60%	-3.60%	125	6+961.43m	End Full Super	5.60%	-5.60%
101	5+696.15m	Begin Normal Crown	-2.00%	-2.00%	109	6+111.45m	Level Crown	-2.00%	0.00%	117	6+551.69m	Reverse Crown	2.00%	-2.00%	125	6+964.94m	Begin Full Super	5.60%	-5.60%
102	5+652.14m	End Normal Crown	-2.00%	-2.00%	109	6+120.95m	Begin Normal Crown	-2.00%	-2.00%	117	6+561.13m	Level Crown	0.00%	-2.00%	125	6+978.78m	Reverse Crown	2.00%	-2.00%
102	5+661.80m	Level Crown	-2.00%	0.00%	110	6+126.48m	End Normal Crown	-2.00%	-2.00%	117	6+570.58m	Begin Normal Crown	-2.00%	-2.00%	125	6+988.43m	Level Crown	0.00%	-2.00%
102	5+671.45m	Reverse Crown	-2.00%	2.00%	110	6+135.81m	Level Crown	-2.00%	0.00%	118	6+576.62m	End Normal Crown	-2.00%	-2.00%	125	6+998.07m	Begin Normal Crown	-2.00%	-2.00%
102	5+684.66m	End Full Super	-5.80%	5.80%	110	6+145.14m	Reverse Crown	-2.00%	2.00%	118	6+586.19m	Level Crown	-2.00%	0.00%	126	6+974.49m	End Normal Crown	-2.00%	-2.00%
102	5+689.80m	Begin Full Super	-5.80%	5.80%	110	6+149.81m	Begin Full Super	-3.00%	3.00%	118	6+595.75m	Reverse Crown	-2.00%	2.00%	126	6+984.05m	Level Crown	0.00%	-2.00%
102	5+703.01m	Reverse Crown	-2.00%	2.00%	110	6+195.34m	End Full Super	-3.00%	3.00%	118	6+608.19m	Begin Full Super	-4.60%	4.60%	126	6+993.62m	Reverse Crown	2.00%	-2.00%
102	5+712.66m	Level Crown	-2.00%	0.00%	110	6+200.01m	Reverse Crown	-2.00%	2.00%	118	6+617.92m	End Full Super	-4.60%	4.60%	126	7+006.05m	Begin Full Super	4.60%	-4.60%
102	5+722.32m	Begin Normal Crown	-2.00%	-2.00%	110	6+209.34m	Level Crown	-2.00%	0.00%	118	6+630.35m	Reverse Crown	-2.00%	2.00%	126	7+010.62m	End Full Super	4.60%	-4.60%
103	5+667.79m	End Normal Crown	-2.00%	-2.00%	110	6+218.67m	Begin Normal Crown	-2.00%	-2.00%	118	6+639.92m	Level Crown	-2.00%	0.00%	126	7+023.05m	Reverse Crown	2.00%	-2.00%
103	5+677.46m	Level Crown	-2.00%	0.00%	111	6+229.82m	End Normal Crown	-2.00%	-2.00%	118	6+649.48m	Begin Normal Crown	-2.00%	-2.00%	126	7+032.62m	Level Crown	0.00%	-2.00%

KHYBER PAKHTUNKHWA INTEGRATED TOURISM AND ENTERPRISE DEVELOPMENT PROJECT
C&W DEPARTMENT, KP

NATIONAL ENGINEERING SERVICES PAKISTAN (PVT.) LTD.

REV.	DATE	DESCRIPTION	APPROVED

DRAWN
SUBMITTED
RECOMMENDED
CHD./VER.
APPROVED

PROJECT: UPGRADATION OF MANKIAL BADA SERI ROAD SWAT

TITLE: SUPERELEVATION SCHEME

DATE: JANUARY 2021

DWG NO. 4169/(iii)/TD SS004

Superelevation Region	Station	Description	Left Outside Lane	Right Outside Lane	Superelevation Region	Station	Description	Left Outside Lane	Right Outside Lane	Superelevation Region	Station	Description	Left Outside Lane	Right Outside Lane	Superelevation Region	Station	Description	Left Outside Lane	Right Outside Lane
126	7+042.18m	Begin Normal Crown	-2.00%	-2.00%	134	7+563.04m	Level Crown	-2.00%	0.00%	142	7+959.86m	Reverse Crown	2.00%	-2.00%	150	8+261.65m	End Full Super	-4.40%	4.40%
127	6+994.12m	End Normal Crown	-2.00%	-2.00%	134	7+572.51m	Begin Normal Crown	-2.00%	-2.00%	142	7+969.41m	Level Crown	0.00%	-2.00%	150	8+273.10m	Reverse Crown	-2.00%	2.00%
127	7+003.78m	Level Crown	0.00%	-2.00%	135	7+535.51m	End Normal Crown	-2.00%	-2.00%	142	7+978.95m	Begin Normal Crown	-2.00%	-2.00%	150	8+282.65m	Level Crown	-2.00%	0.00%
127	7+013.43m	Reverse Crown	2.00%	-2.00%	135	7+544.99m	Level Crown	0.00%	-2.00%	143	7+934.09m	End Normal Crown	-2.00%	-2.00%	150	8+292.19m	Begin Normal Crown	-2.00%	-2.00%
127	7+028.53m	End Full Super	5.80%	-5.80%	135	7+554.46m	Reverse Crown	2.00%	-2.00%	143	7+943.64m	Level Crown	-2.00%	0.00%	151	8+337.51m	End Normal Crown	-2.00%	-2.00%
127	7+031.78m	Begin Full Super	5.80%	-5.80%	135	7+562.99m	Begin Full Super	3.80%	-3.80%	143	7+953.18m	Reverse Crown	-2.00%	2.00%	151	8+347.03m	Level Crown	-2.00%	0.00%
127	7+046.87m	Reverse Crown	2.00%	-2.00%	135	7+583.06m	End Full Super	3.80%	-3.80%	143	7+964.64m	Begin Full Super	-4.40%	4.40%	151	8+356.56m	Reverse Crown	-2.00%	2.00%
127	7+056.53m	Level Crown	0.00%	-2.00%	135	7+591.59m	Reverse Crown	2.00%	-2.00%	143	7+974.32m	End Full Super	-4.40%	4.40%	151	8+367.03m	Begin Full Super	-4.20%	4.20%
127	7+066.18m	Begin Normal Crown	-2.00%	-2.00%	135	7+601.06m	Level Crown	0.00%	-2.00%	143	7+985.77m	Reverse Crown	-2.00%	2.00%	151	8+378.51m	End Full Super	-4.20%	4.20%
128	7+013.87m	End Normal Crown	-2.00%	-2.00%	135	7+610.54m	Begin Normal Crown	-2.00%	-2.00%	143	7+995.32m	Level Crown	-2.00%	0.00%	151	8+388.99m	Reverse Crown	-2.00%	2.00%
128	7+023.53m	Level Crown	-2.00%	0.00%	136	7+621.37m	End Normal Crown	-2.00%	-2.00%	143	8+004.86m	Begin Normal Crown	-2.00%	-2.00%	151	8+398.51m	Level Crown	-2.00%	0.00%
128	7+033.18m	Reverse Crown	-2.00%	2.00%	136	7+630.82m	Level Crown	-2.00%	0.00%	144	7+975.20m	End Normal Crown	-2.00%	-2.00%	151	8+408.03m	Begin Normal Crown	-2.00%	-2.00%
128	7+051.53m	Begin Full Super	-5.80%	5.80%	136	7+640.26m	Reverse Crown	-2.00%	2.00%	144	7+984.67m	Level Crown	0.00%	-2.00%	152	8+360.89m	End Normal Crown	-2.00%	-2.00%
128	7+055.56m	End Full Super	-5.80%	5.80%	136	7+647.82m	Begin Full Super	-3.60%	3.60%	144	7+994.14m	Reverse Crown	2.00%	-2.00%	152	8+370.56m	Level Crown	0.00%	-2.00%
128	7+073.90m	Reverse Crown	-2.00%	2.00%	136	7+684.03m	End Full Super	-3.60%	3.60%	144	8+002.67m	Begin Full Super	3.80%	-3.80%	152	8+380.22m	Reverse Crown	2.00%	-2.00%
128	7+083.56m	Level Crown	-2.00%	0.00%	136	7+691.58m	Reverse Crown	-2.00%	2.00%	144	8+016.75m	End Full Super	3.80%	-3.80%	152	8+399.56m	Begin Full Super	6.00%	-6.00%
128	7+093.21m	Begin Normal Crown	-2.00%	-2.00%	136	7+701.03m	Level Crown	-2.00%	0.00%	144	8+025.27m	Reverse Crown	2.00%	-2.00%	152	8+400.37m	End Full Super	6.00%	-6.00%
129	7+062.73m	End Normal Crown	-2.00%	-2.00%	136	7+710.47m	Begin Normal Crown	-2.00%	-2.00%	144	8+034.75m	Level Crown	0.00%	-2.00%	152	8+419.71m	Reverse Crown	2.00%	-2.00%
129	7+072.14m	Level Crown	0.00%	-2.00%	137	7+694.07m	End Normal Crown	-2.00%	-2.00%	144	8+044.22m	Begin Normal Crown	-2.00%	-2.00%	152	8+429.37m	Level Crown	0.00%	-2.00%
129	7+081.55m	Reverse Crown	2.00%	-2.00%	137	7+703.67m	Level Crown	0.00%	-2.00%	145	8+005.39m	End Normal Crown	-2.00%	-2.00%	152	8+439.04m	Begin Normal Crown	-2.00%	-2.00%
129	7+088.14m	Begin Full Super	3.40%	-3.40%	137	7+713.27m	Reverse Crown	2.00%	-2.00%	145	8+014.95m	Level Crown	-2.00%	0.00%	153	8+467.23m	End Normal Crown	-2.00%	-2.00%
129	7+106.98m	End Full Super	3.40%	-3.40%	137	7+727.67m	Begin Full Super	5.00%	-5.00%	145	8+024.52m	Reverse Crown	-2.00%	2.00%	153	8+476.90m	Level Crown	-2.00%	0.00%
129	7+113.57m	Reverse Crown	2.00%	-2.00%	137	7+739.21m	End Full Super	5.00%	-5.00%	145	8+036.95m	Begin Full Super	-4.60%	4.60%	153	8+486.57m	Reverse Crown	-2.00%	2.00%
129	7+122.98m	Level Crown	0.00%	-2.00%	137	7+753.61m	Reverse Crown	2.00%	-2.00%	145	8+040.44m	End Full Super	-4.60%	4.60%	153	8+505.90m	Begin Full Super	-6.00%	6.00%
129	7+132.40m	Begin Normal Crown	-2.00%	-2.00%	137	7+763.21m	Level Crown	0.00%	-2.00%	145	8+052.88m	Reverse Crown	-2.00%	2.00%	153	8+528.64m	End Full Super	-6.00%	6.00%
130	7+150.01m	End Normal Crown	-2.00%	-2.00%	137	7+772.81m	Begin Normal Crown	-2.00%	-2.00%	145	8+062.44m	Level Crown	-2.00%	0.00%	153	8+547.98m	Reverse Crown	-2.00%	2.00%
130	7+159.45m	Level Crown	-2.00%	0.00%	138	7+728.97m	End Normal Crown	-2.00%	-2.00%	145	8+072.01m	Begin Normal Crown	-2.00%	-2.00%	153	8+557.64m	Level Crown	-2.00%	0.00%
130	7+168.90m	Reverse Crown	-2.00%	2.00%	138	7+738.42m	Level Crown	-2.00%	0.00%	146	8+038.36m	End Normal Crown	-2.00%	-2.00%	153	8+567.31m	Begin Normal Crown	-2.00%	-2.00%
130	7+176.45m	Begin Full Super	-3.60%	3.60%	138	7+747.86m	Reverse Crown	-2.00%	2.00%	146	8+047.88m	Level Crown	0.00%	-2.00%	154	8+525.19m	End Normal Crown	-2.00%	-2.00%
130	7+187.21m	End Full Super	-3.60%	3.60%	138	7+755.42m	Begin Full Super	-3.60%	3.60%	146	8+057.41m	Reverse Crown	2.00%	-2.00%	154	8+534.64m	Level Crown	0.00%	-2.00%
130	7+194.76m	Reverse Crown	-2.00%	2.00%	138	7+789.76m	End Full Super	-3.60%	3.60%	146	8+067.88m	Begin Full Super	4.20%	-4.20%	154	8+544.08m	Reverse Crown	2.00%	-2.00%
130	7+204.21m	Level Crown	-2.00%	0.00%	138	7+797.32m	Reverse Crown	-2.00%	2.00%	146	8+072.64m	End Full Super	4.20%	-4.20%	154	8+551.64m	Begin Full Super	3.60%	-3.60%
130	7+213.65m	Begin Normal Crown	-2.00%	-2.00%	138	7+806.76m	Level Crown	-2.00%	0.00%	146	8+083.11m	Reverse Crown	2.00%	-2.00%	154	8+564.03m	End Full Super	3.60%	-3.60%
131	7+174.12m	End Normal Crown	-2.00%	-2.00%	138	7+816.21m	Begin Normal Crown	-2.00%	-2.00%	146	8+092.64m	Level Crown	0.00%	-2.00%	154	8+571.58m	Reverse Crown	2.00%	-2.00%
131	7+183.64m	Level Crown	0.00%	-2.00%	139	7+780.94m	End Normal Crown	-2.00%	-2.00%	146	8+102.16m	Begin Normal Crown	-2.00%	-2.00%	154	8+581.03m	Level Crown	0.00%	-2.00%
131	7+193.17m	Reverse Crown	2.00%	-2.00%	139	7+790.41m	Level Crown	0.00%	-2.00%	147	8+056.27m	End Normal Crown	-2.00%	-2.00%	154	8+590.47m	Begin Normal Crown	-2.00%	-2.00%
131	7+203.64m	Begin Full Super	4.20%	-4.20%	139	7+799.89m	Reverse Crown	2.00%	-2.00%	147	8+065.89m	Level Crown	-2.00%	0.00%	155	8+560.60m	End Normal Crown	-2.00%	-2.00%
131	7+217.00m	End Full Super	4.20%	-4.20%	139	7+808.41m	Begin Full Super	3.80%	-3.80%	147	8+075.50m	Reverse Crown	-2.00%	2.00%	155	8+570.24m	Level Crown	0.00%	-2.00%
131	7+227.48m	Reverse Crown	2.00%	-2.00%	139	7+837.15m	End Full Super	3.80%	-3.80%	147	8+090.89m	Begin Full Super	-5.20%	5.20%	155	8+579.89m	Reverse Crown	2.00%	-2.00%
131	7+237.00m	Level Crown	0.00%	-2.00%	139	7+845.68m	Reverse Crown	2.00%	-2.00%	147	8+090.92m	End Full Super	-5.20%	5.20%	155	8+597.24m	Begin Full Super	5.60%	-5.60%
131	7+246.53m	Begin Normal Crown	-2.00%	-2.00%	139	7+855.15m	Level Crown	0.00%	-2.00%	147	8+106.31m	Reverse Crown	-2.00%	2.00%	155	8+615.11m	End Full Super	5.60%	-5.60%
132	7+205.81m	End Normal Crown	-2.00%	-2.00%	139	7+864.62m	Begin Normal Crown	-2.00%	-2.00%	147	8+115.92m	Level Crown	-2.00%	0.00%	155	8+632.47m	Reverse Crown	2.00%	-2.00%
132	7+215.48m	Level Crown	-2.00%	0.00%	140	7+847.16m	End Normal Crown	-2.00%	-2.00%	147	8+125.54m	Begin Normal Crown	-2.00%	-2.00%	155	8+642.11m	Level Crown	0.00%	-2.00%
132	7+225.14m	Reverse Crown	-2.00%	2.00%	140	7+856.76m	Level Crown	0.00%	-2.00%	148	8+083.44m	End Normal Crown	-2.00%	-2.00%	155	8+651.75m	Begin Normal Crown	-2.00%	-2.00%
132	7+244.48m	Begin Full Super	-6.00%	6.00%	140	7+866.36m	Reverse Crown	2.00%	-2.00%	148	8+092.94m	Level Crown	0.00%	-2.00%	156	8+603.79m	End Normal Crown	-2.00%	-2.00%
132	7+270.53m	End Full Super	-6.00%	6.00%	140	7+880.76m	Begin Full Super	5.00%	-5.00%	148	8+102.44m	Reverse Crown	2.00%	-2.00%	156	8+613.36m	Level Crown	-2.00%	0.00%
132	7+289.86m	Reverse Crown	-2.00%	2.00%	140	7+883.26m	End Full Super	5.00%	-5.00%	148	8+111.94m	Begin Full Super	4.00%	-4.00%	156	8+622.92m	Reverse Crown	-2.00%	2.00%
132	7+299.53m	Level Crown	-2.00%	0.00%	140	7+897.66m	Reverse Crown	2.00%	-2.00%	148	8+136.84m	End Full Super	4.00%	-4.00%	156	8+635.36m	Begin Full Super	-4.60%	4.60%
132	7+309.19m	Begin Normal Crown	-2.00%	-2.00%	140	7+907.26m	Level Crown	0.00%	-2.00%	148	8+146.34m	Reverse Crown	2.00%	-2.00%	156	8+647.87m	End Full Super	-4.60%	4.60%
133	7+289.31m	End Normal Crown	-2.00%	-2.00%	140	7+916.86m	Begin Normal Crown	-2.00%	-2.00%	148	8+155.84m	Level Crown	0.00%	-2.00%	156	8+660.30m	Reverse Crown	-2.00%	2.00%
133	7+298.97m	Level Crown	0.00%	-2.00%	141	7+868.80m	End Normal Crown	-2.00%	-2.00%	148	8+165.34m	Begin Normal Crown	-2.00%	-2.00%	156	8+669.87m	Level Crown	-2.00%	0.00%
133	7+308.62m	Reverse Crown	2.00%	-2.00%	141	7+878.42m	Level Crown	-2.00%	0.00%	149	8+178.49m	End Normal Crown	-2.00%	-2.00%	156	8+679.43m	Begin Normal Crown	-2.00%	-2.00%
133	7+326.97m	Begin Full Super	5.80%	-5.80%	141	7+888.03m	Reverse Crown	-2.00%	2.00%	149	8+187.90m	Level Crown	0.00%	-2.00%	157	8+763.69m	End Normal Crown	-2.00%	-2.00%
133	7+352.32m	End Full Super	5.80%	-5.80%	141	7+903.42m	Begin Full Super	-5.20%	5.20%	149	8+197.31m	Reverse Crown	2.00%	-2.00%	157	8+773.10m	Level Crown	0.00%	-2.00%
133	7+370.66m	Reverse Crown	2.00%	-2.00%	141	7+907.74m	End Full Super	-5.20%	5.20%	149	8+203.90m	Begin Full Super	3.40%	-3.40%	157	8+782.51m	Reverse Crown	2.00%	-2.00%
133	7+380.32m	Level Crown	0.00%	-2.00%	141	7+923.13m	Reverse Crown	-2.00%	2.00%	149	8+237.93m	End Full Super	3.40%	-3.40%	157	8+789.10m	Begin Full Super	3.40%	-3.40%
133	7+389.97m	Begin Normal Crown	-2.00%	-2.00%	141	7+932.74m	Level Crown	-2.00%	0.00%	149	8+244.52m	Reverse Crown	2.00%	-2.00%	157	8+829.48m	End Full Super	3.40%	-3.40%
134	7+492.57m	End Normal Crown	-2.00%	-2.00%	141	7+942.36m	Begin Normal Crown	-2.00%	-2.00%	149	8+253.93m	Level Crown	0.00%	-2.00%	157	8+836.06m	Reverse Crown	2.00%	-2.00%
134	7+502.04m	Level Crown	-2.00%	0.00%	142	7+909.50m	End Normal Crown	-2.00%	-2.00%	149	8+263.35m	Begin Normal Crown	-2.00%	-2.00%	157	8+845.48m	Level Crown	0.00%	-2.00%
134	7+511.51m	Reverse Crown	-2.00%	2.00%	142	7+919.05m	Level Crown	0.00%	-2.00%	150	8+223.50m	End Normal Crown	-2.00%	-2.00%	157	8+854.89m	Begin Normal Crown	-2.00%	-2.00%
134	7+520.04m	Begin Full Super	-3.80%	3.80%	142	7+928.59m	Reverse Crown	2.00%	-2.00%	150	8+233.05m	Level Crown	-2.00%	0.00%	158	8+847.54m	End Normal Crown	-2.00%	-2.00%
134	7+545.04m	End Full Super	-3.80%	3.80%	142	7+940.05m	Begin Full Super	4.40%	-4.40%	150	8+242.59m	Reverse Crown	-2.00%	2.00%	158	8+857.13m	Level Crown	0.00%	-2.00%
134	7+553.56m	Reverse Crown	-2.00%	2.00%	142	7+948.41m	End Full Super	4.40%	-4.40%	150	8+254.05m	Begin Full Super	-4.40%	4.40%	158	8+866.71m	Reverse Crown	2.00%	-2.00%

KHYBER PAKHTUNKHWA
INTEGRATED TOURISM
AND ENTERPRISE
DEVELOPMENT PROJECT
C&W DEPARTMENT, KP

NATIONAL ENGINEERING SERVICES
PAKISTAN (PVT.) LTD.

REV.	DATE	DESCRIPTION	APPROVED	
				DRAWN
				SUBMITTED
				RECOMMENDED
				CHD./VER.
				APPROVED

PROJECT:
UPGRADATION OF MANKIAL
BADA SERI ROAD SWAT

TITLE
SUPERELEVATION SCHEME

DATE
JANUARY 2021

DWG NO.
4169/(iii)/TD SS005

Superelevation Region	Station	Description	Left Outside Lane	Right Outside Lane
158	8+880.13m	Begin Full Super	4.80%	-4.80%
158	8+894.04m	End Full Super	4.80%	-4.80%
158	8+907.45m	Reverse Crown	2.00%	-2.00%
158	8+917.04m	Level Crown	0.00%	-2.00%
158	8+926.62m	Begin Normal Crown	-2.00%	-2.00%
159	8+883.96m	End Normal Crown	-2.00%	-2.00%
159	8+893.55m	Level Crown	-2.00%	0.00%
159	8+903.13m	Reverse Crown	-2.00%	2.00%
159	8+916.55m	Begin Full Super	-4.80%	4.80%
159	8+940.06m	End Full Super	-4.80%	4.80%
159	8+953.48m	Reverse Crown	-2.00%	2.00%
159	8+963.06m	Level Crown	-2.00%	0.00%
159	8+972.65m	Begin Normal Crown	-2.00%	-2.00%
160	8+952.73m	End Normal Crown	-2.00%	-2.00%
160	8+962.21m	Level Crown	0.00%	-2.00%
160	8+971.68m	Reverse Crown	2.00%	-2.00%
160	8+980.21m	Begin Full Super	3.80%	-3.80%
160	9+032.02m	End Full Super	3.80%	-3.80%
160	9+040.54m	Reverse Crown	2.00%	-2.00%
160	9+050.02m	Level Crown	0.00%	-2.00%
160	9+059.49m	Begin Normal Crown	-2.00%	-2.00%
161	9+068.67m	End Normal Crown	-2.00%	-2.00%
161	9+077.96m	Level Crown	0.00%	-2.00%
161	9+087.25m	Reverse Crown	2.00%	-2.00%
161	9+090.96m	Begin Full Super	2.80%	-2.80%
161	9+126.49m	End Full Super	2.80%	-2.80%

Superelevation Region	Station	Description	Left Outside Lane	Right Outside Lane
161	9+130.21m	Reverse Crown	2.00%	-2.00%
161	9+139.49m	Level Crown	0.00%	-2.00%
161	9+148.78m	Begin Normal Crown	-2.00%	-2.00%
162	9+121.06m	End Normal Crown	-2.00%	-2.00%
162	9+130.71m	Level Crown	-2.00%	0.00%
162	9+140.37m	Reverse Crown	-2.00%	2.00%
162	9+158.71m	Begin Full Super	-5.80%	5.80%
162	9+175.06m	End Full Super	-5.80%	5.80%
162	9+193.40m	Reverse Crown	-2.00%	2.00%
162	9+203.06m	Level Crown	-2.00%	0.00%
162	9+212.71m	Begin Normal Crown	-2.00%	-2.00%
163	9+182.78m	End Normal Crown	-2.00%	-2.00%
163	9+192.44m	Level Crown	0.00%	-2.00%
163	9+202.11m	Reverse Crown	2.00%	-2.00%
163	9+221.44m	Begin Full Super	6.00%	-6.00%
163	9+233.25m	End Full Super	6.00%	-6.00%
163	9+252.58m	Reverse Crown	2.00%	-2.00%
163	9+262.25m	Level Crown	0.00%	-2.00%
163	9+271.92m	Begin Normal Crown	-2.00%	-2.00%
164	9+264.83m	End Normal Crown	-2.00%	-2.00%
164	9+274.83m	Level Crown	-2.00%	0.00%
164	9+284.83m	Reverse Crown	-2.00%	2.00%
164	9+286.83m	Begin Full Super	-2.40%	2.40%
164	9+319.82m	End Full Super	-2.40%	2.40%
164	9+321.82m	Reverse Crown	-2.00%	2.00%
164	9+331.82m	Level Crown	-2.00%	0.00%

Superelevation Region	Station	Description	Left Outside Lane	Right Outside Lane
164	9+341.82m	Begin Normal Crown	-2.00%	-2.00%
165	9+414.11m	End Normal Crown	-2.00%	-2.00%
165	9+423.49m	Level Crown	-2.00%	0.00%
165	9+432.86m	Reverse Crown	-2.00%	2.00%
165	9+438.49m	Begin Full Super	-3.20%	3.20%
165	9+492.73m	End Full Super	-3.20%	3.20%
165	9+498.36m	Reverse Crown	-2.00%	2.00%
165	9+507.73m	Level Crown	-2.00%	0.00%
165	9+517.11m	Begin Normal Crown	-2.00%	-2.00%
166	9+496.32m	End Normal Crown	-2.00%	-2.00%
166	9+505.90m	Level Crown	-2.00%	0.00%
166	9+515.48m	Reverse Crown	-2.00%	2.00%
166	9+528.90m	Begin Full Super	-4.80%	4.80%
166	9+562.18m	End Full Super	-4.80%	4.80%
166	9+575.60m	Reverse Crown	-2.00%	2.00%
166	9+585.18m	Level Crown	-2.00%	0.00%
166	9+594.76m	Begin Normal Crown	-2.00%	-2.00%
167	9+548.54m	End Normal Crown	-2.00%	-2.00%
167	9+558.14m	Level Crown	0.00%	-2.00%
167	9+567.74m	Reverse Crown	2.00%	-2.00%
167	9+582.14m	Begin Full Super	5.00%	-5.00%
167	9+600.29m	End Full Super	5.00%	-5.00%
167	9+614.69m	Reverse Crown	2.00%	-2.00%
167	9+624.29m	Level Crown	0.00%	-2.00%
167	9+633.89m	Begin Normal Crown	-2.00%	-2.00%
168	9+607.48m	End Normal Crown	-2.00%	-2.00%

Superelevation Region	Station	Description	Left Outside Lane	Right Outside Lane
168	9+617.15m	Level Crown	0.00%	-2.00%
168	9+626.82m	Reverse Crown	2.00%	-2.00%
168	9+646.15m	Begin Full Super	6.00%	-6.00%
168	9+657.16m	End Full Super	6.00%	-6.00%
168	9+676.50m	Reverse Crown	2.00%	-2.00%
168	9+686.16m	Level Crown	0.00%	-2.00%
168	9+695.83m	Begin Normal Crown	-2.00%	-2.00%
169	9+693.58m	End Normal Crown	-2.00%	-2.00%
169	9+703.08m	Level Crown	0.00%	-2.00%
169	9+712.58m	Reverse Crown	2.00%	-2.00%
169	9+722.08m	Begin Full Super	4.00%	-4.00%
169	9+744.01m	End Full Super	4.00%	-4.00%
169	9+753.51m	Reverse Crown	2.00%	-2.00%
169	9+763.01m	Level Crown	0.00%	-2.00%
169	9+772.51m	Begin Normal Crown	-2.00%	-2.00%
169	9+757.04m	End Alignment	-2.00%	-2.00%

KHYBER PAKHTUNKHWA INTEGRATED TOURISM AND ENTERPRISE DEVELOPMENT PROJECT C&W DEPARTMENT, KP

NATIONAL ENGINEERING SERVICES PAKISTAN (PVT.) LTD.

REV.	DATE	DESCRIPTION	APPROVED

DRAWN
SUBMITTED
RECOMMENDED
CHD./VER.
APPROVED

PROJECT: UPGRADATION OF MANKIAL BADA SERI ROAD SWAT

TITLE: SUPERELEVATION SCHEME

DATE: JANUARY 2021

DWG NO. 4169/(iii)/TD PD006

Superelevation Region	Station	Description	Left Outside Lane	Right Outside Lane	Superelevation Region	Station	Description	Left Outside Lane	Right Outside Lane	Superelevation Region	Station	Description	Left Outside Lane	Right Outside Lane	Superelevation Region	Station	Description	Left Outside Lane	Right Outside Lane
1	0+000.00m	Begin Alignment	-2.00%	-2.00%	7	0+477.67m	End Normal Shoulder	-2.00%	-2.00%	12	1+101.85m	Begin Normal Shoulder	-2.00%	-2.00%	18	1+340.60m	End Full Super	5.60%	-5.60%
1	-0+037.22m	End Normal Shoulder	-2.00%	-2.00%	7	0+492.07m	End Normal Crown	-2.00%	-2.00%	13	1+080.33m	End Normal Shoulder	-2.00%	-2.00%	18	1+343.49m	Low Shoulder Match	5.00%	-5.00%
1	-0+022.76m	End Normal Crown	-2.00%	-2.00%	7	0+501.67m	Level Crown	0.00%	-2.00%	13	1+094.83m	End Normal Crown	-2.00%	-2.00%	18	1+357.96m	Reverse Crown	2.00%	-2.00%
1	-0+013.12m	Level Crown	-2.00%	0.00%	7	0+511.27m	Reverse Crown	2.00%	-2.00%	13	1+104.49m	Level Crown	0.00%	-2.00%	18	1+367.60m	Level Crown	0.00%	-2.00%
1	-0+003.47m	Reverse Crown	-2.00%	2.00%	7	0+525.67m	Begin Full Super	5.00%	-5.00%	13	1+114.16m	Reverse Crown	2.00%	-2.00%	18	1+377.24m	Begin Normal Crown	-2.00%	-2.00%
1	0+010.99m	Low Shoulder Match	-5.00%	5.00%	7	0+531.45m	End Full Super	5.00%	-5.00%	13	1+128.66m	Low Shoulder Match	5.00%	-5.00%	18	1+391.71m	Begin Normal Shoulder	-2.00%	-2.00%
1	0+013.88m	Begin Full Super	-5.60%	5.60%	7	0+545.85m	Reverse Crown	2.00%	-2.00%	13	1+133.49m	Begin Full Super	6.00%	-6.00%	19	1+318.62m	End Normal Shoulder	-2.00%	-2.00%
1	0+024.47m	End Full Super	-5.60%	5.60%	7	0+555.45m	Level Crown	0.00%	-2.00%	13	1+142.98m	End Full Super	6.00%	-6.00%	19	1+333.12m	End Normal Crown	-2.00%	-2.00%
1	0+027.36m	Low Shoulder Match	-5.00%	5.00%	7	0+565.05m	Begin Normal Crown	-2.00%	-2.00%	13	1+147.81m	Low Shoulder Match	5.00%	-5.00%	19	1+342.79m	Level Crown	-2.00%	0.00%
1	0+041.82m	Reverse Crown	-2.00%	2.00%	7	0+579.45m	Begin Normal Shoulder	-2.00%	-2.00%	13	1+162.31m	Reverse Crown	2.00%	-2.00%	19	1+352.46m	Reverse Crown	-2.00%	2.00%
1	0+051.47m	Level Crown	-2.00%	0.00%	8	0+560.94m	End Normal Shoulder	-2.00%	-2.00%	13	1+171.98m	Level Crown	0.00%	-2.00%	19	1+366.96m	Low Shoulder Match	-5.00%	5.00%
1	0+061.11m	Begin Normal Crown	-2.00%	-2.00%	8	0+575.34m	End Normal Crown	-2.00%	-2.00%	13	1+181.64m	Begin Normal Crown	-2.00%	-2.00%	19	1+371.79m	Begin Full Super	-6.00%	6.00%
1	0+075.57m	Begin Normal Shoulde	-2.00%	-2.00%	8	0+584.94m	Level Crown	-2.00%	0.00%	13	1+196.14m	Begin Normal Shoulder	-2.00%	-2.00%	19	1+377.79m	End Full Super	-6.00%	6.00%
2	0+027.21m	End Normal Shoulder	-2.00%	-2.00%	8	0+594.54m	Reverse Crown	-2.00%	2.00%	14	1+114.74m	End Normal Shoulder	-2.00%	-2.00%	19	1+382.62m	Low Shoulder Match	-5.00%	5.00%
2	0+041.05m	End Normal Crown	-2.00%	-2.00%	8	0+608.94m	Begin Full Super	-5.00%	5.00%	14	1+129.24m	End Normal Crown	-2.00%	-2.00%	19	1+397.12m	Reverse Crown	-2.00%	2.00%
2	0+050.28m	Level Crown	-2.00%	0.00%	8	0+630.78m	End Full Super	-5.00%	5.00%	14	1+138.91m	Level Crown	0.00%	-2.00%	19	1+406.79m	Level Crown	-2.00%	0.00%
2	0+059.51m	Reverse Crown	-2.00%	2.00%	8	0+645.18m	Reverse Crown	-2.00%	2.00%	14	1+148.57m	Reverse Crown	2.00%	-2.00%	19	1+416.46m	Begin Normal Crown	-2.00%	-2.00%
2	0+062.28m	Begin Full Super	-2.60%	2.60%	8	0+654.78m	Level Crown	-2.00%	0.00%	14	1+163.07m	Low Shoulder Match	5.00%	-5.00%	19	1+430.96m	Begin Normal Shoulder	-2.00%	-2.00%
2	0+091.71m	End Full Super	-2.60%	2.60%	8	0+664.38m	Begin Normal Crown	-2.00%	-2.00%	14	1+167.91m	Begin Full Super	6.00%	-6.00%	20	1+348.17m	End Normal Shoulder	-2.00%	-2.00%
2	0+094.48m	Reverse Crown	-2.00%	2.00%	8	0+678.78m	Begin Normal Shoulder	-2.00%	-2.00%	14	1+175.30m	End Full Super	6.00%	-6.00%	20	1+362.67m	End Normal Crown	-2.00%	-2.00%
2	0+103.71m	Level Crown	-2.00%	0.00%	9	0+738.74m	End Normal Shoulder	-2.00%	-2.00%	14	1+180.13m	Low Shoulder Match	5.00%	-5.00%	20	1+372.34m	Level Crown	0.00%	-2.00%
2	0+112.94m	Begin Normal Crown	-2.00%	-2.00%	9	0+752.90m	End Normal Crown	-2.00%	-2.00%	14	1+194.63m	Reverse Crown	2.00%	-2.00%	20	1+382.01m	Reverse Crown	2.00%	-2.00%
2	0+126.79m	Begin Normal Shoulde	-2.00%	-2.00%	9	0+762.35m	Level Crown	0.00%	-2.00%	14	1+204.30m	Level Crown	0.00%	-2.00%	20	1+396.51m	Low Shoulder Match	5.00%	-5.00%
3	0+185.49m	End Normal Shoulder	-2.00%	-2.00%	9	0+771.79m	Reverse Crown	2.00%	-2.00%	14	1+213.97m	Begin Normal Crown	-2.00%	-2.00%	20	1+399.62m	End Full Super	6.00%	-6.00%
3	0+200.49m	End Normal Crown	-2.00%	-2.00%	9	0+779.35m	Begin Full Super	3.60%	-3.60%	14	1+228.47m	Begin Normal Shoulder	-2.00%	-2.00%	20	1+401.34m	Begin Full Super	6.00%	-6.00%
3	0+210.49m	Level Crown	-2.00%	0.00%	9	0+814.95m	End Full Super	3.60%	-3.60%	15	1+161.84m	End Normal Shoulder	-2.00%	-2.00%	20	1+404.45m	Low Shoulder Match	5.00%	-5.00%
3	0+220.49m	Begin Full Super	-2.00%	2.00%	9	0+822.51m	Reverse Crown	2.00%	-2.00%	15	1+176.12m	End Normal Crown	-2.00%	-2.00%	20	1+418.95m	Reverse Crown	2.00%	-2.00%
3	0+220.49m	Reverse Crown	-2.00%	2.00%	9	0+831.95m	Level Crown	0.00%	-2.00%	15	1+185.65m	Level Crown	-2.00%	0.00%	20	1+428.62m	Level Crown	0.00%	-2.00%
3	0+259.37m	End Full Super	-2.00%	2.00%	9	0+841.40m	Begin Normal Crown	-2.00%	-2.00%	15	1+195.17m	Reverse Crown	-2.00%	2.00%	20	1+438.29m	Begin Normal Crown	-2.00%	-2.00%
3	0+259.37m	Reverse Crown	-2.00%	2.00%	9	0+855.56m	Begin Normal Shoulder	-2.00%	-2.00%	15	1+205.65m	Begin Full Super	-4.20%	4.20%	20	1+452.79m	Begin Normal Shoulder	-2.00%	-2.00%
3	0+269.37m	Level Crown	-2.00%	0.00%	10	0+809.58m	End Normal Shoulder	-2.00%	-2.00%	15	1+227.59m	End Full Super	-4.20%	4.20%	21	1+404.98m	End Normal Shoulder	-2.00%	-2.00%
3	0+279.37m	Begin Normal Crown	-2.00%	-2.00%	10	0+823.51m	End Normal Crown	-2.00%	-2.00%	15	1+238.07m	Reverse Crown	-2.00%	2.00%	21	1+419.46m	End Normal Crown	-2.00%	-2.00%
3	0+294.37m	Begin Normal Shoulde	-2.00%	-2.00%	10	0+832.79m	Level Crown	0.00%	-2.00%	15	1+247.59m	Level Crown	-2.00%	0.00%	21	1+429.12m	Level Crown	-2.00%	0.00%
4	0+257.38m	End Normal Shoulder	-2.00%	-2.00%	10	0+842.08m	Reverse Crown	2.00%	-2.00%	15	1+257.12m	Begin Normal Crown	-2.00%	-2.00%	21	1+438.77m	Reverse Crown	-2.00%	2.00%
4	0+271.55m	End Normal Crown	-2.00%	-2.00%	10	0+845.79m	Begin Full Super	2.80%	-2.80%	15	1+271.40m	Begin Normal Shoulder	-2.00%	-2.00%	21	1+453.26m	Low Shoulder Match	-5.00%	5.00%
4	0+280.99m	Level Crown	0.00%	-2.00%	10	0+904.84m	End Full Super	2.80%	-2.80%	16	1+204.62m	End Normal Shoulder	-2.00%	-2.00%	21	1+453.81m	End Full Super	-5.80%	5.80%
4	0+290.44m	Reverse Crown	2.00%	-2.00%	10	0+908.56m	Reverse Crown	2.00%	-2.00%	16	1+219.02m	End Normal Crown	-2.00%	-2.00%	21	1+457.12m	Begin Full Super	-5.80%	5.80%
4	0+297.99m	Begin Full Super	3.60%	-3.60%	10	0+917.84m	Level Crown	0.00%	-2.00%	16	1+228.62m	Level Crown	0.00%	-2.00%	21	1+457.68m	Low Shoulder Match	-5.00%	5.00%
4	0+341.46m	End Full Super	3.60%	-3.60%	10	0+927.13m	Begin Normal Crown	-2.00%	-2.00%	16	1+238.22m	Reverse Crown	2.00%	-2.00%	21	1+472.16m	Reverse Crown	-2.00%	2.00%
4	0+349.02m	Reverse Crown	2.00%	-2.00%	10	0+941.06m	Begin Normal Shoulder	-2.00%	-2.00%	16	1+252.62m	Begin Full Super	5.00%	-5.00%	21	1+481.81m	Level Crown	-2.00%	0.00%
4	0+358.46m	Level Crown	0.00%	-2.00%	11	0+963.53m	End Normal Shoulder	-2.00%	-2.00%	16	1+260.03m	End Full Super	5.00%	-5.00%	21	1+491.47m	Begin Normal Crown	-2.00%	-2.00%
4	0+367.91m	Begin Normal Crown	-2.00%	-2.00%	11	0+978.03m	End Normal Crown	-2.00%	-2.00%	16	1+274.43m	Reverse Crown	2.00%	-2.00%	21	1+505.95m	Begin Normal Shoulder	-2.00%	-2.00%
4	0+382.07m	Begin Normal Shoulde	-2.00%	-2.00%	11	0+987.70m	Level Crown	-2.00%	0.00%	16	1+284.03m	Level Crown	0.00%	-2.00%	22	1+434.28m	End Normal Shoulder	-2.00%	-2.00%
5	0+350.89m	End Normal Shoulder	-2.00%	-2.00%	11	0+997.37m	Reverse Crown	-2.00%	2.00%	16	1+293.63m	Begin Normal Crown	-2.00%	-2.00%	22	1+448.78m	End Normal Crown	-2.00%	-2.00%
5	0+365.01m	End Normal Crown	-2.00%	-2.00%	11	1+011.87m	Low Shoulder Match	-5.00%	5.00%	16	1+308.03m	Begin Normal Shoulder	-2.00%	-2.00%	22	1+458.45m	Level Crown	0.00%	-2.00%
5	0+374.42m	Level Crown	-2.00%	0.00%	11	1+016.70m	Begin Full Super	-6.00%	6.00%	17	1+234.87m	End Normal Shoulder	-2.00%	-2.00%	22	1+468.11m	Reverse Crown	2.00%	-2.00%
5	0+383.83m	Reverse Crown	-2.00%	2.00%	11	1+020.47m	End Full Super	-6.00%	6.00%	17	1+249.37m	End Normal Crown	-2.00%	-2.00%	22	1+481.85m	End Full Super	6.00%	-6.00%
5	0+390.42m	Begin Full Super	-3.40%	3.40%	11	1+025.30m	Low Shoulder Match	-5.00%	5.00%	17	1+259.03m	Level Crown	-2.00%	0.00%	22	1+482.61m	Low Shoulder Match	5.00%	-5.00%
5	0+418.74m	End Full Super	-3.40%	3.40%	11	1+039.80m	Reverse Crown	-2.00%	2.00%	17	1+268.70m	Reverse Crown	-2.00%	2.00%	22	1+486.69m	Low Shoulder Match	5.00%	-5.00%
5	0+425.33m	Reverse Crown	-2.00%	2.00%	11	1+049.47m	Level Crown	-2.00%	0.00%	17	1+283.20m	Low Shoulder Match	-5.00%	5.00%	22	1+487.45m	Begin Full Super	6.00%	-6.00%
5	0+434.74m	Level Crown	-2.00%	0.00%	11	1+059.13m	Begin Normal Crown	-2.00%	-2.00%	17	1+288.03m	Begin Full Super	-6.00%	6.00%	22	1+501.19m	Reverse Crown	2.00%	-2.00%
5	0+444.15m	Begin Normal Crown	-2.00%	-2.00%	11	1+073.63m	Begin Normal Shoulder	-2.00%	-2.00%	17	1+301.02m	End Full Super	-6.00%	6.00%	22	1+510.85m	Level Crown	0.00%	-2.00%
5	0+458.27m	Begin Normal Shoulde	-2.00%	-2.00%	12	0+988.26m	End Normal Shoulder	-2.00%	-2.00%	17	1+305.86m	Low Shoulder Match	-5.00%	5.00%	22	1+520.52m	Begin Normal Crown	-2.00%	-2.00%
6	0+398.59m	End Normal Shoulder	-2.00%	-2.00%	12	1+002.76m	End Normal Crown	-2.00%	-2.00%	17	1+320.36m	Reverse Crown	-2.00%	2.00%	22	1+535.02m	Begin Normal Shoulder	-2.00%	-2.00%
6	0+412.80m	End Normal Crown	-2.00%	-2.00%	12	1+012.43m	Level Crown	-2.00%	0.00%	17	1+330.02m	Level Crown	-2.00%	0.00%	23	1+452.12m	End Normal Shoulder	-2.00%	-2.00%
6	0+422.27m	Level Crown	-2.00%	0.00%	12	1+022.10m	Reverse Crown	-2.00%	2.00%	17	1+339.69m	Begin Normal Crown	-2.00%	-2.00%	23	1+466.62m	End Normal Crown	-2.00%	-2.00%
6	0+431.75m	Reverse Crown	-2.00%	2.00%	12	1+036.60m	Low Shoulder Match	-5.00%	5.00%	17	1+354.19m	Begin Normal Shoulder	-2.00%	-2.00%	23	1+476.29m	Level Crown	0.00%	-2.00%
6	0+440.27m	Begin Full Super	-3.80%	3.80%	12	1+041.43m	Begin Full Super	-6.00%	6.00%	18	1+275.47m	End Normal Shoulder	-2.00%	-2.00%	23	1+485.95m	Reverse Crown	2.00%	-2.00%
6	0+503.40m	End Full Super	-3.80%	3.80%	12	1+048.69m	End Full Super	-6.00%	6.00%	18	1+289.93m	End Normal Crown	-2.00%	-2.00%	23	1+497.25m	End Full Super	6.00%	-6.00%
6	0+511.92m	Reverse Crown	-2.00%	2.00%	12	1+053.52m	Low Shoulder Match	-5.00%	5.00%	18	1+299.58m	Level Crown	0.00%	-2.00%	23	1+500.45m	Low Shoulder Match	5.00%	-5.00%
6	0+521.40m	Level Crown	-2.00%	0.00%	12	1+068.02m	Reverse Crown	-2.00%	2.00%	18	1+309.22m	Reverse Crown	2.00%	-2.00%	23	1+502.08m	Low Shoulder Match	5.00%	-5.00%
6	0+530.87m	Begin Normal Crown	-2.00%	-2.00%	12	1+077.69m	Level Crown	-2.00%	0.00%	18	1+323.68m	Low Shoulder Match	5.00%	-5.00%	23	1+505.29m	Begin Full Super	6.00%	-6.00%
6	0+545.08m	Begin Normal Shoulde	-2.00%	-2.00%	12	1+087.35m	Begin Normal Crown	-2.00%	-2.00%	18	1+326.58m	Begin Full Super	5.60%	-5.60%	23	1+516.58m	Reverse Crown	2.00%	-2.00%

KHYBER PAKHTUNKHWA INTEGRATED TOURISM AND ENTERPRISE DEVELOPMENT PROJECT
C&W DEPARTMENT, KP

NATIONAL ENGINEERING SERVICES PAKISTAN (PVT.) LTD.

REV.	DATE	DESCRIPTION	APPROVED

DRAWN
SUBMITTED
RECOMMENDED
CHD./VER.
APPROVED

PROJECT:
UPGRADATION OF MANKIAL BADA SERI ROAD SWAT

TITLE
SUPERELEVATION SCHEME

DATE
JANUARY 2021

DWG NO.
4169/(iii)/TD SS001

Superelevation Region	Station	Description	Left Outside Lane	Right Outside Lane	Superelevation Region	Station	Description	Left Outside Lane	Right Outside Lane	Superelevation Region	Station	Description	Left Outside Lane	Right Outside Lane	Superelevation Region	Station	Description	Left Outside Lane	Right Outside Lane
23	1+526.25m	Level Crown	0.00%	-2.00%	29	1+759.14m	Reverse Crown	-2.00%	2.00%	35	2+022.95m	Begin Full Super	2.00%	-2.00%	41	2+475.07m	Begin Full Super	-4.60%	4.60%
23	1+535.91m	Begin Normal Crown	-2.00%	-2.00%	29	1+768.72m	Level Crown	-2.00%	0.00%	35	2+022.95m	Reverse Crown	2.00%	-2.00%	41	2+495.08m	End Full Super	-4.60%	4.60%
23	1+550.41m	Begin Normal Shoulde	-2.00%	-2.00%	29	1+778.31m	Begin Normal Crown	-2.00%	-2.00%	35	2+061.19m	End Full Super	2.00%	-2.00%	41	2+507.52m	Reverse Crown	-2.00%	2.00%
24	1+485.30m	End Normal Shoulder	-2.00%	-2.00%	29	1+792.68m	Begin Normal Shoulder	-2.00%	-2.00%	35	2+061.19m	Reverse Crown	2.00%	-2.00%	41	2+517.08m	Level Crown	-2.00%	0.00%
24	1+499.68m	End Normal Crown	-2.00%	-2.00%	30	1+717.28m	End Normal Shoulder	-2.00%	-2.00%	35	2+071.19m	Level Crown	0.00%	-2.00%	41	2+526.65m	Begin Normal Crown	-2.00%	-2.00%
24	1+509.26m	Level Crown	-2.00%	0.00%	30	1+731.76m	End Normal Crown	-2.00%	-2.00%	35	2+081.19m	Begin Normal Crown	-2.00%	-2.00%	41	2+541.00m	Begin Normal Shoulder	-2.00%	-2.00%
24	1+518.84m	Reverse Crown	-2.00%	2.00%	30	1+741.42m	Level Crown	0.00%	-2.00%	35	2+096.19m	Begin Normal Shoulder	-2.00%	-2.00%	42	2+475.05m	End Normal Shoulder	-2.00%	-2.00%
24	1+532.26m	Begin Full Super	-4.80%	4.80%	30	1+751.07m	Reverse Crown	2.00%	-2.00%	36	2+091.14m	End Normal Shoulder	-2.00%	-2.00%	42	2+489.34m	End Normal Crown	-2.00%	-2.00%
24	1+542.94m	End Full Super	-4.80%	4.80%	30	1+765.56m	Low Shoulder Match	5.00%	-5.00%	36	2+106.14m	End Normal Crown	-2.00%	-2.00%	42	2+498.86m	Level Crown	-2.00%	0.00%
24	1+556.36m	Reverse Crown	-2.00%	2.00%	30	1+769.42m	Begin Full Super	5.80%	-5.80%	36	2+116.14m	Level Crown	-2.00%	0.00%	42	2+508.39m	Reverse Crown	-2.00%	2.00%
24	1+565.94m	Level Crown	-2.00%	0.00%	30	1+769.78m	End Full Super	5.80%	-5.80%	36	2+126.14m	Reverse Crown	-2.00%	2.00%	42	2+518.86m	Begin Full Super	-4.20%	4.20%
24	1+575.52m	Begin Normal Crown	-2.00%	-2.00%	30	1+773.64m	Low Shoulder Match	5.00%	-5.00%	36	2+128.14m	Begin Full Super	-2.40%	2.40%	42	2+533.52m	End Full Super	-4.20%	4.20%
24	1+589.90m	Begin Normal Shoulde	-2.00%	-2.00%	30	1+788.12m	Reverse Crown	2.00%	-2.00%	36	2+154.62m	End Full Super	-2.40%	2.40%	42	2+544.00m	Reverse Crown	-2.00%	2.00%
25	1+535.56m	End Normal Shoulder	-2.00%	-2.00%	30	1+797.78m	Level Crown	0.00%	-2.00%	36	2+156.62m	Reverse Crown	-2.00%	2.00%	42	2+553.52m	Level Crown	-2.00%	0.00%
25	1+549.84m	End Normal Crown	-2.00%	-2.00%	30	1+807.43m	Begin Normal Crown	-2.00%	-2.00%	36	2+166.62m	Level Crown	-2.00%	0.00%	42	2+563.04m	Begin Normal Crown	-2.00%	-2.00%
25	1+559.36m	Level Crown	0.00%	-2.00%	30	1+821.91m	Begin Normal Shoulder	-2.00%	-2.00%	36	2+176.62m	Begin Normal Crown	-2.00%	-2.00%	42	2+577.33m	Begin Normal Shoulder	-2.00%	-2.00%
25	1+568.89m	Reverse Crown	2.00%	-2.00%	31	1+751.99m	End Normal Shoulder	-2.00%	-2.00%	36	2+191.62m	Begin Normal Shoulder	-2.00%	-2.00%	43	2+547.16m	End Normal Shoulder	-2.00%	-2.00%
25	1+579.36m	Begin Full Super	4.20%	-4.20%	31	1+766.16m	End Normal Crown	-2.00%	-2.00%	37	2+155.33m	End Normal Shoulder	-2.00%	-2.00%	43	2+561.16m	End Normal Crown	-2.00%	-2.00%
25	1+597.38m	End Full Super	4.20%	-4.20%	31	1+775.60m	Level Crown	-2.00%	0.00%	37	2+169.75m	End Normal Crown	-2.00%	-2.00%	43	2+570.50m	Level Crown	0.00%	-2.00%
25	1+607.86m	Reverse Crown	2.00%	-2.00%	31	1+785.05m	Reverse Crown	-2.00%	2.00%	37	2+179.37m	Level Crown	-2.00%	0.00%	43	2+579.83m	Reverse Crown	2.00%	-2.00%
25	1+617.38m	Level Crown	0.00%	-2.00%	31	1+792.60m	Begin Full Super	-3.60%	3.60%	37	2+188.98m	Reverse Crown	-2.00%	2.00%	43	2+584.50m	Begin Full Super	3.00%	-3.00%
25	1+626.91m	Begin Normal Crown	-2.00%	-2.00%	31	1+818.89m	End Full Super	-3.60%	3.60%	37	2+203.41m	Low Shoulder Match	-5.00%	5.00%	43	2+643.38m	End Full Super	3.00%	-3.00%
25	1+641.19m	Begin Normal Shoulde	-2.00%	-2.00%	31	1+826.44m	Reverse Crown	-2.00%	2.00%	37	2+204.37m	Begin Full Super	-5.20%	5.20%	43	2+648.04m	Reverse Crown	2.00%	-2.00%
26	1+583.95m	End Normal Shoulder	-2.00%	-2.00%	31	1+835.89m	Level Crown	-2.00%	0.00%	37	2+208.60m	End Full Super	-5.20%	5.20%	43	2+657.38m	Level Crown	0.00%	-2.00%
26	1+598.45m	End Normal Crown	-2.00%	-2.00%	31	1+845.33m	Begin Normal Crown	-2.00%	-2.00%	37	2+209.57m	Low Shoulder Match	-5.00%	5.00%	43	2+666.71m	Begin Normal Crown	-2.00%	-2.00%
26	1+608.12m	Level Crown	-2.00%	0.00%	31	1+859.50m	Begin Normal Shoulder	-2.00%	-2.00%	37	2+223.99m	Reverse Crown	-2.00%	2.00%	43	2+680.71m	Begin Normal Shoulder	-2.00%	-2.00%
26	1+617.79m	Reverse Crown	-2.00%	2.00%	32	1+787.91m	End Normal Shoulder	-2.00%	-2.00%	37	2+233.60m	Level Crown	-2.00%	0.00%	44	2+634.28m	End Normal Shoulder	-2.00%	-2.00%
26	1+632.29m	Low Shoulder Match	-5.00%	5.00%	32	1+802.41m	End Normal Crown	-2.00%	-2.00%	37	2+243.22m	Begin Normal Crown	-2.00%	-2.00%	44	2+649.28m	End Normal Crown	-2.00%	-2.00%
26	1+633.79m	End Full Super	-6.00%	6.00%	32	1+812.08m	Level Crown	0.00%	-2.00%	37	2+257.64m	Begin Normal Shoulder	-2.00%	-2.00%	44	2+659.28m	Level Crown	-2.00%	0.00%
26	1+637.12m	Begin Full Super	-6.00%	6.00%	32	1+821.75m	Reverse Crown	2.00%	-2.00%	38	2+181.91m	End Normal Shoulder	-2.00%	-2.00%	44	2+669.28m	Begin Full Super	-2.00%	2.00%
26	1+638.62m	Low Shoulder Match	-5.00%	5.00%	32	1+836.25m	Low Shoulder Match	5.00%	-5.00%	38	2+196.16m	End Normal Crown	-2.00%	-2.00%	44	2+669.28m	Reverse Crown	-2.00%	2.00%
26	1+653.12m	Reverse Crown	-2.00%	2.00%	32	1+841.08m	Begin Full Super	6.00%	-6.00%	38	2+205.66m	Level Crown	0.00%	-2.00%	44	2+711.04m	End Full Super	-2.00%	2.00%
26	1+662.79m	Level Crown	-2.00%	0.00%	32	1+852.41m	End Full Super	6.00%	-6.00%	38	2+215.16m	Reverse Crown	2.00%	-2.00%	44	2+711.04m	Reverse Crown	-2.00%	2.00%
26	1+672.46m	Begin Normal Crown	-2.00%	-2.00%	32	1+857.25m	Low Shoulder Match	5.00%	-5.00%	38	2+224.66m	Begin Full Super	4.00%	-4.00%	44	2+721.04m	Level Crown	-2.00%	0.00%
26	1+686.96m	Begin Normal Shoulde	-2.00%	-2.00%	32	1+871.75m	Reverse Crown	2.00%	-2.00%	38	2+242.46m	End Full Super	4.00%	-4.00%	44	2+731.04m	Begin Normal Crown	-2.00%	-2.00%
27	1+603.49m	End Normal Shoulder	-2.00%	-2.00%	32	1+881.41m	Level Crown	0.00%	-2.00%	38	2+251.96m	Reverse Crown	2.00%	-2.00%	44	2+746.04m	Begin Normal Shoulder	-2.00%	-2.00%
27	1+617.95m	End Normal Crown	-2.00%	-2.00%	32	1+891.08m	Begin Normal Crown	-2.00%	-2.00%	38	2+261.46m	Level Crown	0.00%	-2.00%	45	2+698.66m	End Normal Shoulder	-2.00%	-2.00%
27	1+627.60m	Level Crown	0.00%	-2.00%	32	1+905.58m	Begin Normal Shoulder	-2.00%	-2.00%	38	2+270.96m	Begin Normal Crown	-2.00%	-2.00%	45	2+712.59m	End Normal Crown	-2.00%	-2.00%
27	1+637.24m	Reverse Crown	2.00%	-2.00%	33	1+829.55m	End Normal Shoulder	-2.00%	-2.00%	38	2+285.21m	Begin Normal Shoulder	-2.00%	-2.00%	45	2+721.87m	Level Crown	0.00%	-2.00%
27	1+651.70m	Low Shoulder Match	5.00%	-5.00%	33	1+844.03m	End Normal Crown	-2.00%	-2.00%	39	2+241.95m	End Normal Shoulder	-2.00%	-2.00%	45	2+731.16m	Reverse Crown	2.00%	-2.00%
27	1+654.60m	Begin Full Super	5.60%	-5.60%	33	1+853.69m	Level Crown	-2.00%	0.00%	39	2+256.12m	End Normal Crown	-2.00%	-2.00%	45	2+734.87m	Begin Full Super	2.80%	-2.80%
27	1+660.92m	End Full Super	5.60%	-5.60%	33	1+863.34m	Reverse Crown	-2.00%	2.00%	39	2+265.56m	Level Crown	-2.00%	0.00%	45	2+745.03m	End Full Super	2.80%	-2.80%
27	1+663.81m	Low Shoulder Match	5.00%	-5.00%	33	1+877.83m	Low Shoulder Match	-5.00%	5.00%	39	2+275.00m	Reverse Crown	-2.00%	2.00%	45	2+748.75m	Reverse Crown	2.00%	-2.00%
27	1+678.27m	Reverse Crown	2.00%	-2.00%	33	1+881.69m	Begin Full Super	-5.80%	5.80%	39	2+282.56m	Begin Full Super	-3.60%	3.60%	45	2+758.03m	Level Crown	0.00%	-2.00%
27	1+687.92m	Level Crown	0.00%	-2.00%	33	1+891.10m	End Full Super	-5.80%	5.80%	39	2+303.53m	End Full Super	-3.60%	3.60%	45	2+767.32m	Begin Normal Crown	-2.00%	-2.00%
27	1+697.56m	Begin Normal Crown	-2.00%	-2.00%	33	1+894.97m	Low Shoulder Match	-5.00%	5.00%	39	2+311.08m	Reverse Crown	-2.00%	2.00%	45	2+781.25m	Begin Normal Shoulder	-2.00%	-2.00%
27	1+712.02m	Begin Normal Shoulde	-2.00%	-2.00%	33	1+909.45m	Reverse Crown	-2.00%	2.00%	39	2+320.53m	Level Crown	-2.00%	0.00%	46	2+719.21m	End Normal Shoulder	-2.00%	-2.00%
28	1+637.89m	End Normal Shoulder	-2.00%	-2.00%	33	1+919.10m	Level Crown	-2.00%	0.00%	39	2+329.97m	Begin Normal Crown	-2.00%	-2.00%	46	2+733.53m	End Normal Crown	-2.00%	-2.00%
28	1+652.29m	End Normal Crown	-2.00%	-2.00%	33	1+928.76m	Begin Normal Crown	-2.00%	-2.00%	39	2+344.14m	Begin Normal Shoulder	-2.00%	-2.00%	46	2+743.07m	Level Crown	0.00%	-2.00%
28	1+661.89m	Level Crown	-2.00%	0.00%	33	1+943.24m	Begin Normal Shoulder	-2.00%	-2.00%	40	2+374.62m	End Normal Shoulder	-2.00%	-2.00%	46	2+752.62m	Reverse Crown	2.00%	-2.00%
28	1+671.49m	Reverse Crown	-2.00%	2.00%	34	1+877.28m	End Normal Shoulder	-2.00%	-2.00%	40	2+388.93m	End Normal Crown	-2.00%	-2.00%	46	2+764.07m	Begin Full Super	4.40%	-4.40%
28	1+685.89m	Begin Full Super	-5.00%	5.00%	34	1+891.21m	End Normal Crown	-2.00%	-2.00%	40	2+398.48m	Level Crown	0.00%	-2.00%	46	2+774.92m	End Full Super	4.40%	-4.40%
28	1+693.12m	End Full Super	-5.00%	5.00%	34	1+900.49m	Level Crown	0.00%	-2.00%	40	2+408.03m	Reverse Crown	2.00%	-2.00%	46	2+786.38m	Reverse Crown	2.00%	-2.00%
28	1+707.52m	Reverse Crown	-2.00%	2.00%	34	1+909.78m	Reverse Crown	2.00%	-2.00%	40	2+419.48m	Begin Full Super	4.40%	-4.40%	46	2+795.92m	Level Crown	0.00%	-2.00%
28	1+717.12m	Level Crown	-2.00%	0.00%	34	1+913.49m	Begin Full Super	2.80%	-2.80%	40	2+446.86m	End Full Super	4.40%	-4.40%	46	2+805.47m	Begin Normal Crown	-2.00%	-2.00%
28	1+726.72m	Begin Normal Crown	-2.00%	-2.00%	34	2+001.33m	End Full Super	2.80%	-2.80%	40	2+458.31m	Reverse Crown	2.00%	-2.00%	46	2+819.79m	Begin Normal Shoulder	-2.00%	-2.00%
28	1+741.12m	Begin Normal Shoulde	-2.00%	-2.00%	34	2+005.04m	Reverse Crown	2.00%	-2.00%	40	2+467.86m	Level Crown	0.00%	-2.00%	47	2+742.08m	End Normal Shoulder	-2.00%	-2.00%
29	1+685.24m	End Normal Shoulder	-2.00%	-2.00%	34	2+014.33m	Level Crown	0.00%	-2.00%	40	2+477.40m	Begin Normal Crown	-2.00%	-2.00%	47	2+756.58m	End Normal Crown	-2.00%	-2.00%
29	1+699.61m	End Normal Crown	-2.00%	-2.00%	34	2+023.61m	Begin Normal Crown	-2.00%	-2.00%	40	2+491.72m	Begin Normal Shoulder	-2.00%	-2.00%	47	2+766.25m	Level Crown	-2.00%	0.00%
29	1+709.19m	Level Crown	-2.00%	0.00%	34	2+037.54m	Begin Normal Shoulder	-2.00%	-2.00%	41	2+429.16m	End Normal Shoulder	-2.00%	-2.00%	47	2+775.92m	Reverse Crown	-2.00%	2.00%
29	1+718.78m	Reverse Crown	-2.00%	2.00%	35	1+987.95m	End Normal Shoulder	-2.00%	-2.00%	41	2+443.51m	End Normal Crown	-2.00%	-2.00%	47	2+790.42m	Low Shoulder Match	-5.00%	5.00%
29	1+732.19m	Begin Full Super	-4.80%	4.80%	35	2+002.95m	End Normal Crown	-2.00%	-2.00%	41	2+453.07m	Level Crown	-2.00%	0.00%	47	2+792.71m	End Full Super	-6.00%	6.00%
29	1+745.72m	End Full Super	-4.80%	4.80%	35	2+012.95m	Level Crown	0.00%	-2.00%	41	2+462.64m	Reverse Crown	-2.00%	2.00%	47	2+795.25m	Begin Full Super	-6.00%	6.00%

KHYBER PAKHTUNKHWA INTEGRATED TOURISM AND ENTERPRISE DEVELOPMENT PROJECT
C&W DEPARTMENT, KP

NATIONAL ENGINEERING SERVICES PAKISTAN (PVT.) LTD.

REV.	DATE	DESCRIPTION	APPROVED

DRAWN
SUBMITTED
RECOMMENDED
CHD./VER.
APPROVED

PROJECT: UPGRADATION OF MANKIAL BADA SERI ROAD SWAT

TITLE: SUPERELEVATION SCHEME

DATE: JANUARY 2021

DWG NO. 4169/(iii)/TD SS002

Superelevation Region	Station	Description	Left Outside Lane	Right Outside Lane	Superelevation Region	Station	Description	Left Outside Lane	Right Outside Lane	Superelevation Region	Station	Description	Left Outside Lane	Right Outside Lane	Superelevation Region	Station	Description	Left Outside Lane	Right Outside Lane
47	2+797.54m	Low Shoulder Match	-5.00%	5.00%	53	3+186.54m	Begin Normal Crown	-2.00%	-2.00%	59	3+540.53m	Begin Normal Shoulder	-2.00%	-2.00%	66	4+003.22m	Level Crown	0.00%	-2.00%
47	2+812.04m	Reverse Crown	-2.00%	2.00%	53	3+200.83m	Begin Normal Shoulder	-2.00%	-2.00%	60	3+506.61m	End Normal Shoulder	-2.00%	-2.00%	66	4+013.22m	Reverse Crown	2.00%	-2.00%
47	2+821.71m	Level Crown	-2.00%	0.00%	54	3+132.92m	End Normal Shoulder	-2.00%	-2.00%	60	3+521.61m	End Normal Crown	-2.00%	-2.00%	66	4+015.22m	Begin Full Super	2.40%	-2.40%
47	2+831.37m	Begin Normal Crown	-2.00%	-2.00%	54	3+147.03m	End Normal Crown	-2.00%	-2.00%	60	3+531.61m	Level Crown	0.00%	-2.00%	66	4+042.66m	End Full Super	2.40%	-2.40%
47	2+845.87m	Begin Normal Shoulde	-2.00%	-2.00%	54	3+156.45m	Level Crown	0.00%	-2.00%	60	3+541.61m	Reverse Crown	2.00%	-2.00%	66	4+044.66m	Reverse Crown	2.00%	-2.00%
48	2+796.59m	End Normal Shoulder	-2.00%	-2.00%	54	3+165.86m	Reverse Crown	2.00%	-2.00%	60	3+543.61m	Begin Full Super	2.40%	-2.40%	66	4+054.66m	Level Crown	0.00%	-2.00%
48	2+811.59m	End Normal Crown	-2.00%	-2.00%	54	3+172.45m	Begin Full Super	3.40%	-3.40%	60	3+574.63m	End Full Super	2.40%	-2.40%	66	4+064.66m	Begin Normal Crown	-2.00%	-2.00%
48	2+821.59m	Level Crown	-2.00%	0.00%	54	3+204.54m	End Full Super	3.40%	-3.40%	60	3+576.63m	Reverse Crown	2.00%	-2.00%	66	4+079.66m	Begin Normal Shoulder	-2.00%	-2.00%
48	2+831.59m	Begin Full Super	-2.00%	2.00%	54	3+211.13m	Reverse Crown	2.00%	-2.00%	60	3+586.63m	Level Crown	0.00%	-2.00%	67	4+029.38m	End Normal Shoulder	-2.00%	-2.00%
48	2+831.59m	Reverse Crown	-2.00%	2.00%	54	3+220.54m	Level Crown	0.00%	-2.00%	60	3+596.63m	Begin Normal Crown	-2.00%	-2.00%	67	4+043.31m	End Normal Crown	-2.00%	-2.00%
48	2+852.07m	End Full Super	-2.00%	2.00%	54	3+229.95m	Begin Normal Crown	-2.00%	-2.00%	60	3+611.63m	Begin Normal Shoulder	-2.00%	-2.00%	67	4+052.59m	Level Crown	-2.00%	0.00%
48	2+852.07m	Reverse Crown	-2.00%	2.00%	54	3+244.07m	Begin Normal Shoulder	-2.00%	-2.00%	61	3+589.76m	End Normal Shoulder	-2.00%	-2.00%	67	4+061.88m	Reverse Crown	-2.00%	2.00%
48	2+862.07m	Level Crown	-2.00%	0.00%	55	3+175.86m	End Normal Shoulder	-2.00%	-2.00%	61	3+603.93m	End Normal Crown	-2.00%	-2.00%	67	4+065.59m	Begin Full Super	-2.80%	2.80%
48	2+872.07m	Begin Normal Crown	-2.00%	-2.00%	55	3+190.18m	End Normal Crown	-2.00%	-2.00%	61	3+613.37m	Level Crown	0.00%	-2.00%	67	4+108.87m	End Full Super	-2.80%	2.80%
48	2+887.07m	Begin Normal Shoulde	-2.00%	-2.00%	55	3+199.72m	Level Crown	-2.00%	0.00%	61	3+622.81m	Reverse Crown	2.00%	-2.00%	67	4+112.59m	Reverse Crown	-2.00%	2.00%
49	2+825.55m	End Normal Shoulder	-2.00%	-2.00%	55	3+209.27m	Reverse Crown	-2.00%	2.00%	61	3+630.37m	Begin Full Super	3.60%	-3.60%	67	4+121.87m	Level Crown	-2.00%	0.00%
49	2+839.67m	End Normal Crown	-2.00%	-2.00%	55	3+220.72m	Begin Full Super	-4.40%	4.40%	61	3+660.74m	End Full Super	3.60%	-3.60%	67	4+131.16m	Begin Normal Crown	-2.00%	-2.00%
49	2+849.08m	Level Crown	-2.00%	0.00%	55	3+224.42m	End Full Super	-4.40%	4.40%	61	3+668.30m	Reverse Crown	2.00%	-2.00%	67	4+145.09m	Begin Normal Shoulder	-2.00%	-2.00%
49	2+858.49m	Reverse Crown	-2.00%	2.00%	55	3+235.87m	Reverse Crown	-2.00%	2.00%	61	3+677.74m	Level Crown	0.00%	-2.00%	68	4+078.01m	End Normal Shoulder	-2.00%	-2.00%
49	2+865.08m	Begin Full Super	-3.40%	3.40%	55	3+245.42m	Level Crown	-2.00%	0.00%	61	3+687.19m	Begin Normal Crown	-2.00%	-2.00%	68	4+092.22m	End Normal Crown	-2.00%	-2.00%
49	2+875.04m	End Full Super	-3.40%	3.40%	55	3+254.96m	Begin Normal Crown	-2.00%	-2.00%	61	3+701.35m	Begin Normal Shoulder	-2.00%	-2.00%	68	4+101.70m	Level Crown	0.00%	-2.00%
49	2+881.62m	Reverse Crown	-2.00%	2.00%	55	3+269.28m	Begin Normal Shoulder	-2.00%	-2.00%	62	3+670.87m	End Normal Shoulder	-2.00%	-2.00%	68	4+111.17m	Reverse Crown	2.00%	-2.00%
49	2+891.04m	Level Crown	-2.00%	0.00%	56	3+241.46m	End Normal Shoulder	-2.00%	-2.00%	62	3+685.22m	End Normal Crown	-2.00%	-2.00%	68	4+119.70m	Begin Full Super	3.80%	-3.80%
49	2+900.45m	Begin Normal Crown	-2.00%	-2.00%	56	3+255.39m	End Normal Crown	-2.00%	-2.00%	62	3+694.79m	Level Crown	-2.00%	0.00%	68	4+154.95m	End Full Super	3.80%	-3.80%
49	2+914.56m	Begin Normal Shoulde	-2.00%	-2.00%	56	3+264.68m	Level Crown	-2.00%	0.00%	62	3+704.35m	Reverse Crown	-2.00%	2.00%	68	4+163.47m	Reverse Crown	2.00%	-2.00%
50	2+856.86m	End Normal Shoulder	-2.00%	-2.00%	56	3+273.96m	Reverse Crown	-2.00%	2.00%	62	3+716.79m	Begin Full Super	-4.60%	4.60%	68	4+172.95m	Level Crown	0.00%	-2.00%
50	2+871.26m	End Normal Crown	-2.00%	-2.00%	56	3+277.68m	Begin Full Super	-2.80%	2.80%	62	3+749.53m	End Full Super	-4.60%	4.60%	68	4+182.42m	Begin Normal Crown	-2.00%	-2.00%
50	2+880.86m	Level Crown	0.00%	-2.00%	56	3+310.74m	End Full Super	-2.80%	2.80%	62	3+761.97m	Reverse Crown	-2.00%	2.00%	68	4+196.63m	Begin Normal Shoulder	-2.00%	-2.00%
50	2+890.46m	Reverse Crown	2.00%	-2.00%	56	3+314.45m	Reverse Crown	-2.00%	2.00%	62	3+771.53m	Level Crown	-2.00%	0.00%	69	4+123.01m	End Normal Shoulder	-2.00%	-2.00%
50	2+904.86m	Begin Full Super	5.00%	-5.00%	56	3+323.74m	Level Crown	-2.00%	0.00%	62	3+781.10m	Begin Normal Crown	-2.00%	-2.00%	69	4+137.41m	End Normal Crown	-2.00%	-2.00%
50	2+921.88m	End Full Super	5.00%	-5.00%	56	3+333.02m	Begin Normal Crown	-2.00%	-2.00%	62	3+795.45m	Begin Normal Shoulder	-2.00%	-2.00%	69	4+147.01m	Level Crown	-2.00%	0.00%
50	2+936.28m	Reverse Crown	2.00%	-2.00%	56	3+346.95m	Begin Normal Shoulder	-2.00%	-2.00%	63	3+738.90m	End Normal Shoulder	-2.00%	-2.00%	69	4+156.61m	Reverse Crown	-2.00%	2.00%
50	2+945.88m	Level Crown	0.00%	-2.00%	57	3+306.46m	End Normal Shoulder	-2.00%	-2.00%	63	3+753.90m	End Normal Crown	-2.00%	-2.00%	69	4+171.01m	Begin Full Super	-5.00%	5.00%
50	2+955.48m	Begin Normal Crown	-2.00%	-2.00%	57	3+320.67m	End Normal Crown	-2.00%	-2.00%	63	3+763.90m	Level Crown	0.00%	-2.00%	69	4+181.98m	End Full Super	-5.00%	5.00%
50	2+969.88m	Begin Normal Shoulde	-2.00%	-2.00%	57	3+330.14m	Level Crown	0.00%	-2.00%	63	3+773.90m	Reverse Crown	2.00%	-2.00%	69	4+196.38m	Reverse Crown	-2.00%	2.00%
51	2+970.17m	End Normal Shoulder	-2.00%	-2.00%	57	3+339.62m	Reverse Crown	2.00%	-2.00%	63	3+775.90m	Begin Full Super	2.40%	-2.40%	69	4+205.98m	Level Crown	-2.00%	0.00%
51	2+985.17m	End Normal Crown	-2.00%	-2.00%	57	3+348.14m	Begin Full Super	3.80%	-3.80%	63	3+810.51m	End Full Super	2.40%	-2.40%	69	4+215.58m	Begin Normal Crown	-2.00%	-2.00%
51	2+995.17m	Level Crown	0.00%	-2.00%	57	3+372.04m	End Full Super	3.80%	-3.80%	63	3+812.51m	Reverse Crown	2.00%	-2.00%	69	4+229.98m	Begin Normal Shoulder	-2.00%	-2.00%
51	3+005.17m	Reverse Crown	2.00%	-2.00%	57	3+380.57m	Reverse Crown	2.00%	-2.00%	63	3+822.51m	Level Crown	0.00%	-2.00%	70	4+167.57m	End Normal Shoulder	-2.00%	-2.00%
51	3+007.17m	Begin Full Super	2.40%	-2.40%	57	3+390.04m	Level Crown	0.00%	-2.00%	63	3+832.51m	Begin Normal Crown	-2.00%	-2.00%	70	4+181.78m	End Normal Crown	-2.00%	-2.00%
51	3+021.40m	End Full Super	2.40%	-2.40%	57	3+399.52m	Begin Normal Crown	-2.00%	-2.00%	63	3+847.51m	Begin Normal Shoulder	-2.00%	-2.00%	70	4+191.26m	Level Crown	0.00%	-2.00%
51	3+023.40m	Reverse Crown	2.00%	-2.00%	57	3+413.73m	Begin Normal Shoulder	-2.00%	-2.00%	64	3+853.48m	End Normal Shoulder	-2.00%	-2.00%	70	4+200.73m	Reverse Crown	2.00%	-2.00%
51	3+033.40m	Level Crown	0.00%	-2.00%	58	3+343.06m	End Normal Shoulder	-2.00%	-2.00%	64	3+867.69m	End Normal Crown	-2.00%	-2.00%	70	4+209.26m	Begin Full Super	3.80%	-3.80%
51	3+043.40m	Begin Normal Crown	-2.00%	-2.00%	58	3+357.53m	End Normal Crown	-2.00%	-2.00%	64	3+877.17m	Level Crown	0.00%	-2.00%	70	4+226.64m	End Full Super	3.80%	-3.80%
51	3+058.40m	Begin Normal Shoulde	-2.00%	-2.00%	58	3+367.17m	Level Crown	-2.00%	0.00%	64	3+886.64m	Reverse Crown	2.00%	-2.00%	70	4+235.16m	Reverse Crown	2.00%	-2.00%
52	2+997.84m	End Normal Shoulder	-2.00%	-2.00%	58	3+376.81m	Reverse Crown	-2.00%	2.00%	64	3+895.17m	Begin Full Super	3.80%	-3.80%	70	4+244.64m	Level Crown	0.00%	-2.00%
52	3+012.84m	End Normal Crown	-2.00%	-2.00%	58	3+391.28m	Low Shoulder Match	-5.00%	5.00%	64	3+936.61m	End Full Super	3.80%	-3.80%	70	4+254.11m	Begin Normal Crown	-2.00%	-2.00%
52	3+022.84m	Level Crown	-2.00%	0.00%	58	3+394.17m	Begin Full Super	-5.60%	5.60%	64	3+945.14m	Reverse Crown	2.00%	-2.00%	70	4+268.32m	Begin Normal Shoulder	-2.00%	-2.00%
52	3+032.84m	Reverse Crown	-2.00%	2.00%	58	3+403.87m	End Full Super	-5.60%	5.60%	64	3+954.61m	Level Crown	0.00%	-2.00%	71	4+238.11m	End Normal Shoulder	-2.00%	-2.00%
52	3+034.84m	Begin Full Super	-2.40%	2.40%	58	3+406.76m	Low Shoulder Match	-5.00%	5.00%	64	3+964.08m	Begin Normal Crown	-2.00%	-2.00%	71	4+253.11m	End Normal Crown	-2.00%	-2.00%
52	3+060.55m	End Full Super	-2.40%	2.40%	58	3+421.23m	Reverse Crown	-2.00%	2.00%	64	3+978.29m	Begin Normal Shoulder	-2.00%	-2.00%	71	4+263.11m	Level Crown	-2.00%	0.00%
52	3+062.55m	Reverse Crown	-2.00%	2.00%	58	3+430.87m	Level Crown	-2.00%	0.00%	65	3+914.65m	End Normal Shoulder	-2.00%	-2.00%	71	4+273.11m	Begin Full Super	-2.00%	2.00%
52	3+072.55m	Level Crown	-2.00%	0.00%	58	3+440.51m	Begin Normal Crown	-2.00%	-2.00%	65	3+929.65m	End Normal Crown	-2.00%	-2.00%	71	4+273.11m	Reverse Crown	-2.00%	2.00%
52	3+082.55m	Begin Normal Crown	-2.00%	-2.00%	58	3+454.98m	Begin Normal Shoulder	-2.00%	-2.00%	65	3+939.65m	Level Crown	-2.00%	0.00%	71	4+299.77m	End Full Super	-2.00%	2.00%
52	3+097.55m	Begin Normal Shoulde	-2.00%	-2.00%	59	3+433.44m	End Normal Shoulder	-2.00%	-2.00%	65	3+949.65m	Reverse Crown	-2.00%	2.00%	71	4+299.77m	Reverse Crown	-2.00%	2.00%
53	3+092.84m	End Normal Shoulder	-2.00%	-2.00%	59	3+447.61m	End Normal Crown	-2.00%	-2.00%	65	3+951.65m	Begin Full Super	-2.40%	2.40%	71	4+309.77m	Level Crown	-2.00%	0.00%
53	3+107.13m	End Normal Crown	-2.00%	-2.00%	59	3+457.05m	Level Crown	0.00%	-2.00%	65	3+997.29m	End Full Super	-2.40%	2.40%	71	4+319.77m	Begin Normal Crown	-2.00%	-2.00%
53	3+116.65m	Level Crown	-2.00%	0.00%	59	3+466.50m	Reverse Crown	2.00%	-2.00%	65	3+999.29m	Reverse Crown	-2.00%	2.00%	71	4+334.77m	Begin Normal Shoulder	-2.00%	-2.00%
53	3+126.17m	Reverse Crown	-2.00%	2.00%	59	3+474.05m	Begin Full Super	3.60%	-3.60%	65	4+009.29m	Level Crown	-2.00%	0.00%	72	4+330.85m	End Normal Shoulder	-2.00%	-2.00%
53	3+136.65m	Begin Full Super	-4.20%	4.20%	59	3+499.91m	End Full Super	3.60%	-3.60%	65	4+019.29m	Begin Normal Crown	-2.00%	-2.00%	72	4+345.85m	End Normal Crown	-2.00%	-2.00%
53	3+157.02m	End Full Super	-4.20%	4.20%	59	3+507.47m	Reverse Crown	2.00%	-2.00%	65	4+034.29m	Begin Normal Shoulder	-2.00%	-2.00%	72	4+355.85m	Level Crown	-2.00%	0.00%
53	3+167.50m	Reverse Crown	-2.00%	2.00%	59	3+516.91m	Level Crown	0.00%	-2.00%	66	3+978.22m	End Normal Shoulder	-2.00%	-2.00%	72	4+365.85m	Begin Full Super	-2.00%	2.00%
53	3+177.02m	Level Crown	-2.00%	0.00%	59	3+526.36m	Begin Normal Crown	-2.00%	-2.00%	66	3+993.22m	End Normal Crown	-2.00%	-2.00%	72	4+365.85m	Reverse Crown	-2.00%	2.00%

KHYBER PAKHTUNKHWA INTEGRATED TOURISM AND ENTERPRISE DEVELOPMENT PROJECT
C&W DEPARTMENT, KP

NATIONAL ENGINEERING SERVICES PAKISTAN (PVT.) LTD.

REV.	DATE	DESCRIPTION	APPROVED

DRAWN
SUBMITTED
RECOMMENDED
CHD./VER.
APPROVED

PROJECT: UPGRADATION OF MANKIAL BADA SERI ROAD SWAT

TITLE: SUPERELEVATION SCHEME

DATE: JANUARY 2021

DWG NO. 4169/(iii)/TD SS003

Superelevation Region	Station	Description	Left Outside Lane	Right Outside Lane	Superelevation Region	Station	Description	Left Outside Lane	Right Outside Lane	Superelevation Region	Station	Description	Left Outside Lane	Right Outside Lane	Superelevation Region	Station	Description	Left Outside Lane	Right Outside Lane
72	4+398.60m	End Full Super	-2.00%	2.00%	78	4+900.28m	End Full Super	-6.00%	6.00%	84	5+282.10m	Reverse Crown	-2.00%	2.00%	90	5+622.04m	Begin Full Super	-3.60%	3.60%
72	4+398.60m	Reverse Crown	-2.00%	2.00%	78	4+905.11m	Low Shoulder Match	-5.00%	5.00%	84	5+288.68m	Begin Full Super	-3.40%	3.40%	90	5+652.47m	End Full Super	-3.60%	3.60%
72	4+408.60m	Level Crown	-2.00%	0.00%	78	4+919.61m	Reverse Crown	-2.00%	2.00%	84	5+311.51m	End Full Super	-3.40%	3.40%	90	5+660.03m	Reverse Crown	-2.00%	2.00%
72	4+418.60m	Begin Normal Crown	-2.00%	-2.00%	78	4+929.28m	Level Crown	-2.00%	0.00%	84	5+318.10m	Reverse Crown	-2.00%	2.00%	90	5+669.47m	Level Crown	-2.00%	0.00%
72	4+433.60m	Begin Normal Shoulde	-2.00%	-2.00%	78	4+938.95m	Begin Normal Crown	-2.00%	-2.00%	84	5+327.51m	Level Crown	-2.00%	0.00%	90	5+678.91m	Begin Normal Crown	-2.00%	-2.00%
73	4+469.79m	End Normal Shoulder	-2.00%	-2.00%	78	4+953.45m	Begin Normal Shoulder	-2.00%	-2.00%	84	5+336.92m	Begin Normal Crown	-2.00%	-2.00%	90	5+693.08m	Begin Normal Shoulder	-2.00%	-2.00%
73	4+483.95m	End Normal Crown	-2.00%	-2.00%	79	4+935.26m	End Normal Shoulder	-2.00%	-2.00%	84	5+351.04m	Begin Normal Shoulder	-2.00%	-2.00%	91	5+660.57m	End Normal Shoulder	-2.00%	-2.00%
73	4+493.40m	Level Crown	-2.00%	0.00%	79	4+949.76m	End Normal Crown	-2.00%	-2.00%	85	5+334.76m	End Normal Shoulder	-2.00%	-2.00%	91	5+674.50m	End Normal Crown	-2.00%	-2.00%
73	4+502.84m	Reverse Crown	-2.00%	2.00%	79	4+959.42m	Level Crown	0.00%	-2.00%	85	5+349.76m	End Normal Crown	-2.00%	-2.00%	91	5+683.78m	Level Crown	-2.00%	0.00%
73	4+510.40m	Begin Full Super	-3.60%	3.60%	79	4+969.09m	Reverse Crown	2.00%	-2.00%	85	5+359.76m	Level Crown	0.00%	-2.00%	91	5+693.07m	Reverse Crown	-2.00%	2.00%
73	4+550.35m	End Full Super	-3.60%	3.60%	79	4+983.59m	Low Shoulder Match	5.00%	-5.00%	85	5+369.76m	Reverse Crown	2.00%	-2.00%	91	5+696.78m	Begin Full Super	-2.80%	2.80%
73	4+557.90m	Reverse Crown	-2.00%	2.00%	79	4+983.67m	End Full Super	6.00%	-6.00%	85	5+370.76m	Begin Full Super	2.20%	-2.20%	91	5+761.02m	End Full Super	-2.80%	2.80%
73	4+567.35m	Level Crown	-2.00%	0.00%	79	4+988.42m	Begin Full Super	6.00%	-6.00%	85	5+404.97m	End Full Super	2.20%	-2.20%	91	5+764.73m	Reverse Crown	-2.00%	2.00%
73	4+576.79m	Begin Normal Crown	-2.00%	-2.00%	79	4+988.50m	Low Shoulder Match	5.00%	-5.00%	85	5+405.97m	Reverse Crown	2.00%	-2.00%	91	5+774.02m	Level Crown	-2.00%	0.00%
73	4+590.96m	Begin Normal Shoulde	-2.00%	-2.00%	79	5+003.00m	Reverse Crown	2.00%	-2.00%	85	5+415.97m	Level Crown	0.00%	-2.00%	91	5+783.30m	Begin Normal Crown	-2.00%	-2.00%
74	4+589.85m	End Normal Shoulder	-2.00%	-2.00%	79	5+012.67m	Level Crown	0.00%	-2.00%	85	5+425.97m	Begin Normal Crown	-2.00%	-2.00%	91	5+797.23m	Begin Normal Shoulder	-2.00%	-2.00%
74	4+604.13m	End Normal Crown	-2.00%	-2.00%	79	5+022.33m	Begin Normal Crown	-2.00%	-2.00%	85	5+440.97m	Begin Normal Shoulder	-2.00%	-2.00%	92	5+924.03m	End Normal Shoulder	-2.00%	-2.00%
74	4+613.66m	Level Crown	0.00%	-2.00%	79	5+036.83m	Begin Normal Shoulder	-2.00%	-2.00%	86	5+389.32m	End Normal Shoulder	-2.00%	-2.00%	92	5+937.96m	End Normal Crown	-2.00%	-2.00%
74	4+623.18m	Reverse Crown	2.00%	-2.00%	80	4+951.32m	End Normal Shoulder	-2.00%	-2.00%	86	5+403.69m	End Normal Crown	-2.00%	-2.00%	92	5+947.24m	Level Crown	-2.00%	0.00%
74	4+633.66m	Begin Full Super	4.20%	-4.20%	80	4+965.82m	End Normal Crown	-2.00%	-2.00%	86	5+413.28m	Level Crown	-2.00%	0.00%	92	5+956.53m	Reverse Crown	-2.00%	2.00%
74	4+659.46m	End Full Super	4.20%	-4.20%	80	4+975.49m	Level Crown	0.00%	-2.00%	86	5+422.86m	Reverse Crown	-2.00%	2.00%	92	5+960.24m	Begin Full Super	-2.80%	2.80%
74	4+669.93m	Reverse Crown	2.00%	-2.00%	80	4+985.16m	Reverse Crown	2.00%	-2.00%	86	5+436.28m	Begin Full Super	-4.80%	4.80%	92	6+054.78m	End Full Super	-2.80%	2.80%
74	4+679.46m	Level Crown	0.00%	-2.00%	80	4+999.66m	Low Shoulder Match	5.00%	-5.00%	86	5+457.43m	End Full Super	-4.80%	4.80%	92	6+058.49m	Reverse Crown	-2.00%	2.00%
74	4+688.98m	Begin Normal Crown	-2.00%	-2.00%	80	5+004.49m	Begin Full Super	6.00%	-6.00%	86	5+470.84m	Reverse Crown	-2.00%	2.00%	92	6+067.78m	Level Crown	-2.00%	0.00%
74	4+703.27m	Begin Normal Shoulde	-2.00%	-2.00%	80	5+009.41m	End Full Super	6.00%	-6.00%	86	5+480.43m	Level Crown	-2.00%	0.00%	92	6+077.06m	Begin Normal Crown	-2.00%	-2.00%
75	4+640.80m	End Normal Shoulder	-2.00%	-2.00%	80	5+014.24m	Low Shoulder Match	5.00%	-5.00%	86	5+490.01m	Begin Normal Crown	-2.00%	-2.00%	92	6+090.99m	Begin Normal Shoulder	-2.00%	-2.00%
75	4+655.05m	End Normal Crown	-2.00%	-2.00%	80	5+028.74m	Reverse Crown	2.00%	-2.00%	86	5+504.38m	Begin Normal Shoulder	-2.00%	-2.00%	93	6+112.70m	End Normal Shoulder	-2.00%	-2.00%
75	4+664.55m	Level Crown	-2.00%	0.00%	80	5+038.41m	Level Crown	0.00%	-2.00%	87	5+426.11m	End Normal Shoulder	-2.00%	-2.00%	93	6+126.91m	End Normal Crown	-2.00%	-2.00%
75	4+674.05m	Reverse Crown	-2.00%	2.00%	80	5+048.08m	Begin Normal Crown	-2.00%	-2.00%	87	5+440.61m	End Normal Crown	-2.00%	-2.00%	93	6+136.38m	Level Crown	0.00%	-2.00%
75	4+683.55m	Begin Full Super	-4.00%	4.00%	80	5+062.58m	Begin Normal Shoulder	-2.00%	-2.00%	87	5+450.28m	Level Crown	0.00%	-2.00%	93	6+145.85m	Reverse Crown	2.00%	-2.00%
75	4+712.27m	End Full Super	-4.00%	4.00%	81	5+017.03m	End Normal Shoulder	-2.00%	-2.00%	87	5+459.95m	Reverse Crown	2.00%	-2.00%	93	6+154.38m	Begin Full Super	3.80%	-3.80%
75	4+721.77m	Reverse Crown	-2.00%	2.00%	81	5+030.95m	End Normal Crown	-2.00%	-2.00%	87	5+474.45m	Low Shoulder Match	5.00%	-5.00%	93	6+234.02m	End Full Super	3.80%	-3.80%
75	4+731.27m	Level Crown	-2.00%	0.00%	81	5+040.24m	Level Crown	0.00%	-2.00%	87	5+479.28m	Begin Full Super	6.00%	-6.00%	93	6+242.54m	Reverse Crown	2.00%	-2.00%
75	4+740.77m	Begin Normal Crown	-2.00%	-2.00%	81	5+049.53m	Reverse Crown	2.00%	-2.00%	87	5+487.11m	End Full Super	6.00%	-6.00%	93	6+252.02m	Level Crown	0.00%	-2.00%
75	4+755.02m	Begin Normal Shoulde	-2.00%	-2.00%	81	5+053.24m	Begin Full Super	2.80%	-2.80%	87	5+491.94m	Low Shoulder Match	5.00%	-5.00%	93	6+261.49m	Begin Normal Crown	-2.00%	-2.00%
76	4+724.82m	End Normal Shoulder	-2.00%	-2.00%	81	5+088.92m	End Full Super	2.80%	-2.80%	87	5+506.44m	Reverse Crown	2.00%	-2.00%	93	6+275.70m	Begin Normal Shoulder	-2.00%	-2.00%
76	4+739.17m	End Normal Crown	-2.00%	-2.00%	81	5+092.63m	Reverse Crown	2.00%	-2.00%	87	5+516.11m	Level Crown	0.00%	-2.00%	94	6+638.94m	End Normal Shoulder	-2.00%	-2.00%
76	4+748.73m	Level Crown	0.00%	-2.00%	81	5+101.92m	Level Crown	0.00%	-2.00%	87	5+525.78m	Begin Normal Crown	-2.00%	-2.00%	94	6+653.94m	End Normal Crown	-2.00%	-2.00%
76	4+758.30m	Reverse Crown	2.00%	-2.00%	81	5+111.20m	Begin Normal Crown	-2.00%	-2.00%	87	5+540.28m	Begin Normal Shoulder	-2.00%	-2.00%	94	6+663.94m	Level Crown	0.00%	-2.00%
76	4+770.73m	Begin Full Super	4.60%	-4.60%	81	5+125.13m	Begin Normal Shoulder	-2.00%	-2.00%	88	5+481.42m	End Normal Shoulder	-2.00%	-2.00%	94	6+673.94m	Reverse Crown	2.00%	-2.00%
76	4+806.89m	End Full Super	4.60%	-4.60%	82	5+095.48m	End Normal Shoulder	-2.00%	-2.00%	88	5+495.82m	End Normal Crown	-2.00%	-2.00%	94	6+675.94m	Begin Full Super	2.40%	-2.40%
76	4+819.32m	Reverse Crown	2.00%	-2.00%	82	5+109.69m	End Normal Crown	-2.00%	-2.00%	88	5+505.42m	Level Crown	-2.00%	0.00%	94	6+728.42m	End Full Super	2.40%	-2.40%
76	4+828.89m	Level Crown	0.00%	-2.00%	82	5+119.16m	Level Crown	0.00%	-2.00%	88	5+515.02m	Reverse Crown	-2.00%	2.00%	94	6+730.42m	Reverse Crown	2.00%	-2.00%
76	4+838.45m	Begin Normal Crown	-2.00%	-2.00%	82	5+128.64m	Reverse Crown	2.00%	-2.00%	88	5+529.42m	Begin Full Super	-5.00%	5.00%	94	6+740.42m	Level Crown	0.00%	-2.00%
76	4+852.80m	Begin Normal Shoulde	-2.00%	-2.00%	82	5+137.16m	Begin Full Super	3.80%	-3.80%	88	5+563.47m	End Full Super	-5.00%	5.00%	94	6+750.42m	Begin Normal Crown	-2.00%	-2.00%
77	4+800.31m	End Normal Shoulder	-2.00%	-2.00%	82	5+173.00m	End Full Super	3.80%	-3.80%	88	5+577.87m	Reverse Crown	-2.00%	2.00%	94	6+765.42m	Begin Normal Shoulder	-2.00%	-2.00%
77	4+814.81m	End Normal Crown	-2.00%	-2.00%	82	5+181.53m	Reverse Crown	2.00%	-2.00%	88	5+587.47m	Level Crown	-2.00%	0.00%	95	6+789.14m	End Normal Shoulder	-2.00%	-2.00%
77	4+824.48m	Level Crown	-2.00%	0.00%	82	5+191.00m	Level Crown	0.00%	-2.00%	88	5+597.07m	Begin Normal Crown	-2.00%	-2.00%	95	6+803.07m	End Normal Crown	-2.00%	-2.00%
77	4+834.15m	Reverse Crown	-2.00%	2.00%	82	5+200.48m	Begin Normal Crown	-2.00%	-2.00%	88	5+611.47m	Begin Normal Shoulder	-2.00%	-2.00%	95	6+812.36m	Level Crown	-2.00%	0.00%
77	4+848.65m	Low Shoulder Match	-5.00%	5.00%	82	5+214.69m	Begin Normal Shoulder	-2.00%	-2.00%	89	5+543.99m	End Normal Shoulder	-2.00%	-2.00%	95	6+821.64m	Reverse Crown	-2.00%	2.00%
77	4+853.48m	Begin Full Super	-6.00%	6.00%	83	5+209.02m	End Normal Shoulder	-2.00%	-2.00%	89	5+558.06m	End Normal Crown	-2.00%	-2.00%	95	6+825.36m	Begin Full Super	-2.80%	2.80%
77	4+858.11m	End Full Super	-6.00%	6.00%	83	5+222.95m	End Normal Crown	-2.00%	-2.00%	89	5+567.43m	Level Crown	-2.00%	0.00%	95	6+912.95m	End Full Super	-2.80%	2.80%
77	4+862.94m	Low Shoulder Match	-5.00%	5.00%	83	5+232.24m	Level Crown	0.00%	-2.00%	89	5+576.81m	Reverse Crown	-2.00%	2.00%	95	6+916.67m	Reverse Crown	-2.00%	2.00%
77	4+877.44m	Reverse Crown	-2.00%	2.00%	83	5+241.52m	Reverse Crown	2.00%	-2.00%	89	5+582.43m	Begin Full Super	-3.20%	3.20%	95	6+925.95m	Level Crown	-2.00%	0.00%
77	4+887.11m	Level Crown	-2.00%	0.00%	83	5+245.24m	Begin Full Super	2.80%	-2.80%	89	5+596.29m	End Full Super	-3.20%	3.20%	95	6+935.24m	Begin Normal Crown	-2.00%	-2.00%
77	4+896.77m	Begin Normal Crown	-2.00%	-2.00%	83	5+270.25m	End Full Super	2.80%	-2.80%	89	5+601.91m	Reverse Crown	-2.00%	2.00%	95	6+949.17m	Begin Normal Shoulder	-2.00%	-2.00%
77	4+911.27m	Begin Normal Shoulde	-2.00%	-2.00%	83	5+273.96m	Reverse Crown	2.00%	-2.00%	89	5+611.29m	Level Crown	-2.00%	0.00%	96	6+995.96m	End Normal Shoulder	-2.00%	-2.00%
78	4+833.49m	End Normal Shoulder	-2.00%	-2.00%	83	5+283.25m	Level Crown	0.00%	-2.00%	89	5+620.66m	Begin Normal Crown	-2.00%	-2.00%	96	7+010.46m	End Normal Crown	-2.00%	-2.00%
78	4+847.99m	End Normal Crown	-2.00%	-2.00%	83	5+292.53m	Begin Normal Crown	-2.00%	-2.00%	89	5+634.72m	Begin Normal Shoulder	-2.00%	-2.00%	96	7+020.13m	Level Crown	-2.00%	0.00%
78	4+857.66m	Level Crown	-2.00%	0.00%	83	5+306.46m	Begin Normal Shoulder	-2.00%	-2.00%	90	5+581.43m	End Normal Shoulder	-2.00%	-2.00%	96	7+029.79m	Reverse Crown	-2.00%	2.00%
78	4+867.33m	Reverse Crown	-2.00%	2.00%	84	5+249.16m	End Normal Shoulder	-2.00%	-2.00%	90	5+595.59m	End Normal Crown	-2.00%	-2.00%	96	7+044.29m	Low Shoulder Match	-5.00%	5.00%
78	4+881.83m	Low Shoulder Match	-5.00%	5.00%	84	5+263.27m	End Normal Crown	-2.00%	-2.00%	90	5+605.04m	Level Crown	-2.00%	0.00%	96	7+049.13m	Begin Full Super	-6.00%	6.00%
78	4+886.66m	Begin Full Super	-6.00%	6.00%	84	5+272.68m	Level Crown	-2.00%	0.00%	90	5+614.48m	Reverse Crown	-2.00%	2.00%	96	7+067.71m	End Full Super	-6.00%	6.00%

KHYBER PAKHTUNKHWA INTEGRATED TOURISM AND ENTERPRISE DEVELOPMENT PROJECT C&W DEPARTMENT, KP

NATIONAL ENGINEERING SERVICES PAKISTAN (PVT.) LTD.

REV.	DATE	DESCRIPTION	APPROVED

DRAWN
SUBMITTED
RECOMMENDED
CHD./VER.
APPROVED

PROJECT: UPGRADATION OF MANKIAL BADA SERI ROAD SWAT

TITLE: SUPERELEVATION SCHEME

DATE: JANUARY 2021

DWG NO. 4169/(iii)/TD SS004

Superelevation Region	Station	Description	Left Outside Lane	Right Outside Lane	Superelevation Region	Station	Description	Left Outside Lane	Right Outside Lane	Superelevation Region	Station	Description	Left Outside Lane	Right Outside Lane	Superelevation Region	Station	Description	Left Outside Lane	Right Outside Lane
96	7+072.55m	Low Shoulder Match	-5.00%	5.00%	102	8+023.64m	Level Crown	-2.00%	0.00%	108	8+556.38m	End Full Super	4.20%	-4.20%	114	8+896.33m	Reverse Crown	2.00%	-2.00%
96	7+087.05m	Reverse Crown	-2.00%	2.00%	102	8+033.64m	Begin Full Super	-2.00%	2.00%	108	8+566.86m	Reverse Crown	2.00%	-2.00%	114	8+905.77m	Level Crown	0.00%	-2.00%
96	7+096.71m	Level Crown	-2.00%	0.00%	102	8+033.64m	Reverse Crown	-2.00%	2.00%	108	8+576.38m	Level Crown	0.00%	-2.00%	114	8+915.22m	Begin Normal Crown	-2.00%	-2.00%
96	7+106.38m	Begin Normal Crown	-2.00%	-2.00%	102	8+085.87m	End Full Super	-2.00%	2.00%	108	8+585.91m	Begin Normal Crown	-2.00%	-2.00%	114	8+929.38m	Begin Normal Shoulder	-2.00%	-2.00%
96	7+120.88m	Begin Normal Shoulde	-2.00%	-2.00%	102	8+085.87m	Reverse Crown	-2.00%	2.00%	108	8+600.19m	Begin Normal Shoulder	-2.00%	-2.00%	115	8+945.60m	End Normal Shoulder	-2.00%	-2.00%
97	7+034.81m	End Normal Shoulder	-2.00%	-2.00%	102	8+095.87m	Level Crown	-2.00%	0.00%	109	8+574.05m	End Normal Shoulder	-2.00%	-2.00%	115	8+960.60m	End Normal Crown	-2.00%	-2.00%
97	7+049.31m	End Normal Crown	-2.00%	-2.00%	102	8+105.87m	Begin Normal Crown	-2.00%	-2.00%	109	8+588.37m	End Normal Crown	-2.00%	-2.00%	115	8+970.60m	Level Crown	-2.00%	0.00%
97	7+058.98m	Level Crown	-2.00%	0.00%	102	8+120.87m	Begin Normal Shoulder	-2.00%	-2.00%	109	8+597.92m	Level Crown	0.00%	-2.00%	115	8+980.60m	Reverse Crown	-2.00%	2.00%
97	7+068.64m	Reverse Crown	-2.00%	2.00%	103	8+100.78m	End Normal Shoulder	-2.00%	-2.00%	109	8+607.46m	Reverse Crown	2.00%	-2.00%	115	8+981.60m	Begin Full Super	-2.20%	2.20%
97	7+083.14m	Low Shoulder Match	-5.00%	5.00%	103	8+115.78m	End Normal Crown	-2.00%	-2.00%	109	8+618.92m	Begin Full Super	4.40%	-4.40%	115	9+026.34m	End Full Super	-2.20%	2.20%
97	7+087.98m	Begin Full Super	-6.00%	6.00%	103	8+125.78m	Level Crown	-2.00%	0.00%	109	8+650.13m	End Full Super	4.40%	-4.40%	115	9+027.34m	Reverse Crown	-2.00%	2.00%
97	7+101.45m	End Full Super	-6.00%	6.00%	103	8+135.78m	Begin Full Super	-2.00%	2.00%	109	8+661.59m	Reverse Crown	2.00%	-2.00%	115	9+037.34m	Level Crown	-2.00%	0.00%
97	7+106.28m	Low Shoulder Match	-5.00%	5.00%	103	8+135.78m	Reverse Crown	-2.00%	2.00%	109	8+671.13m	Level Crown	0.00%	-2.00%	115	9+047.34m	Begin Normal Crown	-2.00%	-2.00%
97	7+120.78m	Reverse Crown	-2.00%	2.00%	103	8+166.52m	End Full Super	-2.00%	2.00%	109	8+680.68m	Begin Normal Crown	-2.00%	-2.00%	115	9+062.34m	Begin Normal Shoulder	-2.00%	-2.00%
97	7+130.45m	Level Crown	-2.00%	0.00%	103	8+166.52m	Reverse Crown	-2.00%	2.00%	109	8+695.00m	Begin Normal Shoulder	-2.00%	-2.00%	116	9+095.75m	End Normal Shoulder	-2.00%	-2.00%
97	7+140.11m	Begin Normal Crown	-2.00%	-2.00%	103	8+176.52m	Level Crown	-2.00%	0.00%	110	8+706.32m	End Normal Shoulder	-2.00%	-2.00%	116	9+110.75m	End Normal Crown	-2.00%	-2.00%
97	7+154.61m	Begin Normal Shoulde	-2.00%	-2.00%	103	8+186.52m	Begin Normal Crown	-2.00%	-2.00%	110	8+720.53m	End Normal Crown	-2.00%	-2.00%	116	9+120.75m	Level Crown	-2.00%	0.00%
98	7+125.52m	End Normal Shoulder	-2.00%	-2.00%	103	8+201.52m	Begin Normal Shoulder	-2.00%	-2.00%	110	8+730.01m	Level Crown	-2.00%	0.00%	116	9+130.75m	Reverse Crown	-2.00%	2.00%
98	7+140.02m	End Normal Crown	-2.00%	-2.00%	104	8+146.73m	End Normal Shoulder	-2.00%	-2.00%	110	8+739.48m	Reverse Crown	-2.00%	2.00%	116	9+131.75m	Begin Full Super	-2.20%	2.20%
98	7+149.69m	Level Crown	0.00%	-2.00%	104	8+160.73m	End Normal Crown	-2.00%	-2.00%	110	8+748.01m	Begin Full Super	-3.80%	3.80%	116	9+186.46m	End Full Super	-2.20%	2.20%
98	7+159.36m	Reverse Crown	2.00%	-2.00%	104	8+170.06m	Level Crown	0.00%	-2.00%	110	8+779.97m	End Full Super	-3.80%	3.80%	116	9+187.46m	Reverse Crown	-2.00%	2.00%
98	7+173.86m	Low Shoulder Match	5.00%	-5.00%	104	8+179.40m	Reverse Crown	2.00%	-2.00%	110	8+788.50m	Reverse Crown	-2.00%	2.00%	116	9+197.46m	Level Crown	-2.00%	0.00%
98	7+178.69m	Begin Full Super	6.00%	-6.00%	104	8+184.06m	Begin Full Super	3.00%	-3.00%	110	8+797.97m	Level Crown	-2.00%	0.00%	116	9+207.46m	Begin Normal Crown	-2.00%	-2.00%
98	7+191.53m	End Full Super	6.00%	-6.00%	104	8+216.24m	End Full Super	3.00%	-3.00%	110	8+807.45m	Begin Normal Crown	-2.00%	-2.00%	116	9+222.46m	Begin Normal Shoulder	-2.00%	-2.00%
98	7+196.36m	Low Shoulder Match	5.00%	-5.00%	104	8+220.91m	Reverse Crown	2.00%	-2.00%	110	8+821.66m	Begin Normal Shoulder	-2.00%	-2.00%	117	9+203.91m	End Normal Shoulder	-2.00%	-2.00%
98	7+210.86m	Reverse Crown	2.00%	-2.00%	104	8+230.24m	Level Crown	0.00%	-2.00%	111	8+752.39m	End Normal Shoulder	-2.00%	-2.00%	117	9+218.07m	End Normal Crown	-2.00%	-2.00%
98	7+220.53m	Level Crown	0.00%	-2.00%	104	8+239.57m	Begin Normal Crown	-2.00%	-2.00%	111	8+766.60m	End Normal Crown	-2.00%	-2.00%	117	9+227.52m	Level Crown	-2.00%	0.00%
98	7+230.19m	Begin Normal Crown	-2.00%	-2.00%	104	8+253.57m	Begin Normal Shoulder	-2.00%	-2.00%	111	8+776.07m	Level Crown	0.00%	-2.00%	117	9+236.96m	Reverse Crown	-2.00%	2.00%
98	7+244.69m	Begin Normal Shoulde	-2.00%	-2.00%	105	8+197.68m	End Normal Shoulder	-2.00%	-2.00%	111	8+785.55m	Reverse Crown	2.00%	-2.00%	117	9+244.52m	Begin Full Super	-3.60%	3.60%
99	7+163.12m	End Normal Shoulder	-2.00%	-2.00%	105	8+211.96m	End Normal Crown	-2.00%	-2.00%	111	8+794.07m	Begin Full Super	3.80%	-3.80%	117	9+331.53m	End Full Super	-3.60%	3.60%
99	7+177.62m	End Normal Crown	-2.00%	-2.00%	105	8+221.49m	Level Crown	0.00%	-2.00%	111	8+812.77m	End Full Super	3.80%	-3.80%	117	9+339.09m	Reverse Crown	-2.00%	2.00%
99	7+187.29m	Level Crown	0.00%	-2.00%	105	8+231.01m	Reverse Crown	2.00%	-2.00%	111	8+821.29m	Reverse Crown	2.00%	-2.00%	117	9+348.53m	Level Crown	-2.00%	0.00%
99	7+196.96m	Reverse Crown	2.00%	-2.00%	105	8+241.49m	Begin Full Super	4.20%	-4.20%	111	8+830.77m	Level Crown	0.00%	-2.00%	117	9+357.98m	Begin Normal Crown	-2.00%	-2.00%
99	7+211.46m	Low Shoulder Match	5.00%	-5.00%	105	8+268.90m	End Full Super	4.20%	-4.20%	111	8+840.24m	Begin Normal Crown	-2.00%	-2.00%	117	9+372.14m	Begin Normal Shoulder	-2.00%	-2.00%
99	7+216.29m	Begin Full Super	6.00%	-6.00%	105	8+279.37m	Reverse Crown	2.00%	-2.00%	111	8+854.45m	Begin Normal Shoulder	-2.00%	-2.00%	118	9+352.08m	End Normal Shoulder	-2.00%	-2.00%
99	7+230.81m	End Full Super	6.00%	-6.00%	105	8+288.90m	Level Crown	0.00%	-2.00%	112	8+782.24m	End Normal Shoulder	-2.00%	-2.00%	118	9+366.29m	End Normal Crown	-2.00%	-2.00%
99	7+235.65m	Low Shoulder Match	5.00%	-5.00%	105	8+298.42m	Begin Normal Crown	-2.00%	-2.00%	112	8+796.62m	End Normal Crown	-2.00%	-2.00%	118	9+375.76m	Level Crown	0.00%	-2.00%
99	7+250.15m	Reverse Crown	2.00%	-2.00%	105	8+312.70m	Begin Normal Shoulder	-2.00%	-2.00%	112	8+806.20m	Level Crown	0.00%	-2.00%	118	9+385.23m	Reverse Crown	2.00%	-2.00%
99	7+259.81m	Level Crown	0.00%	-2.00%	106	8+257.20m	End Normal Shoulder	-2.00%	-2.00%	112	8+815.79m	Reverse Crown	2.00%	-2.00%	118	9+393.76m	Begin Full Super	3.80%	-3.80%
99	7+269.48m	Begin Normal Crown	-2.00%	-2.00%	106	8+271.05m	End Normal Crown	-2.00%	-2.00%	112	8+825.18m	End Full Super	4.80%	-4.80%	118	9+502.09m	End Full Super	3.80%	-3.80%
99	7+283.98m	Begin Normal Shoulde	-2.00%	-2.00%	106	8+280.28m	Level Crown	0.00%	-2.00%	112	8+829.20m	Begin Full Super	4.80%	-4.80%	118	9+510.62m	Reverse Crown	2.00%	-2.00%
100	7+483.72m	End Normal Shoulder	-2.00%	-2.00%	106	8+289.51m	Reverse Crown	2.00%	-2.00%	112	8+838.60m	Reverse Crown	2.00%	-2.00%	118	9+520.09m	Level Crown	0.00%	-2.00%
100	7+497.65m	End Normal Crown	-2.00%	-2.00%	106	8+292.28m	Begin Full Super	2.60%	-2.60%	112	8+848.18m	Level Crown	0.00%	-2.00%	118	9+529.57m	Begin Normal Crown	-2.00%	-2.00%
100	7+506.93m	Level Crown	-2.00%	0.00%	106	8+321.86m	End Full Super	2.60%	-2.60%	112	8+857.77m	Begin Normal Crown	-2.00%	-2.00%	118	9+543.78m	Begin Normal Shoulder	-2.00%	-2.00%
100	7+516.22m	Reverse Crown	-2.00%	2.00%	106	8+324.63m	Reverse Crown	2.00%	-2.00%	112	8+872.14m	Begin Normal Shoulder	-2.00%	-2.00%	119	9+525.21m	End Normal Shoulder	-2.00%	-2.00%
100	7+519.93m	Begin Full Super	-2.80%	2.80%	106	8+333.86m	Level Crown	0.00%	-2.00%	113	8+795.82m	End Normal Shoulder	-2.00%	-2.00%	119	9+539.14m	End Normal Crown	-2.00%	-2.00%
100	7+593.16m	End Full Super	-2.80%	2.80%	106	8+343.09m	Begin Normal Crown	-2.00%	-2.00%	113	8+810.32m	End Normal Crown	-2.00%	-2.00%	119	9+548.42m	Level Crown	-2.00%	0.00%
100	7+596.87m	Reverse Crown	-2.00%	2.00%	106	8+356.94m	Begin Normal Shoulder	-2.00%	-2.00%	113	8+819.98m	Level Crown	-2.00%	0.00%	119	9+557.71m	Reverse Crown	-2.00%	2.00%
100	7+606.16m	Level Crown	-2.00%	0.00%	107	8+435.51m	End Normal Shoulder	-2.00%	-2.00%	113	8+829.65m	Reverse Crown	-2.00%	2.00%	119	9+561.42m	Begin Full Super	-2.80%	2.80%
100	7+615.44m	Begin Normal Crown	-2.00%	-2.00%	107	8+449.88m	End Normal Crown	-2.00%	-2.00%	113	8+844.15m	Low Shoulder Match	-5.00%	5.00%	119	9+631.74m	End Full Super	-2.80%	2.80%
100	7+629.37m	Begin Normal Shoulde	-2.00%	-2.00%	107	8+459.46m	Level Crown	-2.00%	0.00%	113	8+844.81m	End Full Super	-6.00%	6.00%	119	9+635.45m	Reverse Crown	-2.00%	2.00%
101	7+823.32m	End Normal Shoulder	-2.00%	-2.00%	107	8+469.05m	Reverse Crown	-2.00%	2.00%	113	8+848.98m	Begin Full Super	-6.00%	6.00%	119	9+644.74m	Level Crown	-2.00%	0.00%
101	7+837.25m	End Normal Crown	-2.00%	-2.00%	107	8+482.46m	Begin Full Super	-4.80%	4.80%	113	8+849.65m	Low Shoulder Match	-5.00%	5.00%	119	9+654.02m	Begin Normal Crown	-2.00%	-2.00%
101	7+846.53m	Level Crown	-2.00%	0.00%	107	8+509.47m	End Full Super	-4.80%	4.80%	113	8+864.15m	Reverse Crown	-2.00%	2.00%	119	9+667.95m	Begin Normal Shoulder	-2.00%	-2.00%
101	7+855.82m	Reverse Crown	-2.00%	2.00%	107	8+522.89m	Reverse Crown	-2.00%	2.00%	113	8+873.81m	Level Crown	-2.00%	0.00%	120	9+693.75m	End Normal Shoulder	-2.00%	-2.00%
101	7+859.53m	Begin Full Super	-2.80%	2.80%	107	8+532.47m	Level Crown	-2.00%	0.00%	113	8+883.48m	Begin Normal Crown	-2.00%	-2.00%	120	9+707.68m	End Normal Crown	-2.00%	-2.00%
101	7+933.56m	End Full Super	-2.80%	2.80%	107	8+542.05m	Begin Normal Crown	-2.00%	-2.00%	113	8+897.98m	Begin Normal Shoulder	-2.00%	-2.00%	120	9+716.96m	Level Crown	-2.00%	0.00%
101	7+937.27m	Reverse Crown	-2.00%	2.00%	107	8+556.43m	Begin Normal Shoulder	-2.00%	-2.00%	114	8+829.08m	End Normal Shoulder	-2.00%	-2.00%	120	9+726.25m	Reverse Crown	-2.00%	2.00%
101	7+946.56m	Level Crown	-2.00%	0.00%	108	8+493.55m	End Normal Shoulder	-2.00%	-2.00%	114	8+843.25m	End Normal Crown	-2.00%	-2.00%	120	9+729.96m	Begin Full Super	-2.80%	2.80%
101	7+955.85m	Begin Normal Crown	-2.00%	-2.00%	108	8+507.84m	End Normal Crown	-2.00%	-2.00%	114	8+852.69m	Level Crown	0.00%	-2.00%	120	9+836.03m	End Full Super	-2.80%	2.80%
101	7+969.77m	Begin Normal Shoulde	-2.00%	-2.00%	108	8+517.36m	Level Crown	0.00%	-2.00%	114	8+862.14m	Reverse Crown	2.00%	-2.00%	120	9+839.74m	Reverse Crown	-2.00%	2.00%
102	7+998.64m	End Normal Shoulder	-2.00%	-2.00%	108	8+526.89m	Reverse Crown	2.00%	-2.00%	114	8+869.69m	Begin Full Super	3.60%	-3.60%	120	9+849.03m	Level Crown	-2.00%	0.00%
102	8+013.64m	End Normal Crown	-2.00%	-2.00%	108	8+537.36m	Begin Full Super	4.20%	-4.20%	114	8+888.77m	End Full Super	3.60%	-3.60%	120	9+858.31m	Begin Normal Crown	-2.00%	-2.00%

KHYBER PAKHTUNKHWA
INTEGRATED TOURISM
AND ENTERPRISE
DEVELOPMENT PROJECT
C&W DEPARTMENT, KP

NATIONAL ENGINEERING SERVICES
PAKISTAN (PVT.) LTD.

REV.	DATE	DESCRIPTION	APPROVED

DRAWN
SUBMITTED
RECOMMENDED
CHD./VER.
APPROVED

PROJECT:
UPGRADATION OF MANKIAL BADA SERI ROAD SWAT

TITLE
SUPERELEVATION SCHEME

DATE
JANUARY 2021

DWG NO.
4169/(iii)/TD SS005

Superelevation Region	Station	Description	Left Outside Lane	Right Outside Lane
124	10+744.62m	Level Crown	0.00%	-2.00%
124	10+754.62m	Begin Normal Crown	-2.00%	-2.00%
124	10+769.62m	Begin Normal Shoulde	-2.00%	-2.00%
125	11+088.36m	End Normal Shoulder	-2.00%	-2.00%
125	11+103.36m	End Normal Crown	-2.00%	-2.00%
125	11+113.36m	Level Crown	-2.00%	0.00%
125	11+123.36m	Begin Full Super	-2.00%	2.00%
125	11+123.36m	Reverse Crown	-2.00%	2.00%
125	11+173.52m	End Full Super	-2.00%	2.00%
125	11+173.52m	Reverse Crown	-2.00%	2.00%
125	11+183.52m	Level Crown	-2.00%	0.00%
125	11+193.52m	Begin Normal Crown	-2.00%	-2.00%
125	11+208.52m	Begin Normal Shoulde	-2.00%	-2.00%
126	11+176.72m	End Normal Shoulder	-2.00%	-2.00%
126	11+190.65m	End Normal Crown	-2.00%	-2.00%

Superelevation Region	Station	Description	Left Outside Lane	Right Outside Lane
126	11+199.94m	Level Crown	-2.00%	0.00%
126	11+209.22m	Reverse Crown	-2.00%	2.00%
126	11+212.94m	Begin Full Super	-2.80%	2.80%
126	11+317.19m	End Full Super	-2.80%	2.80%
126	11+320.90m	Reverse Crown	-2.00%	2.00%
126	11+330.19m	Level Crown	-2.00%	0.00%
126	11+339.47m	Begin Normal Crown	-2.00%	-2.00%
126	11+353.40m	Begin Normal Shoulder	-2.00%	-2.00%
127	11+445.25m	End Normal Shoulder	-2.00%	-2.00%
127	11+459.53m	End Normal Crown	-2.00%	-2.00%
127	11+469.06m	Level Crown	0.00%	-2.00%
127	11+478.58m	Reverse Crown	2.00%	-2.00%
127	11+489.06m	Begin Full Super	4.20%	-4.20%
127	11+581.42m	End Full Super	4.20%	-4.20%
127	11+591.90m	Reverse Crown	2.00%	-2.00%

Superelevation Region	Station	Description	Left Outside Lane	Right Outside Lane
127	11+601.42m	Level Crown	0.00%	-2.00%
127	11+610.94m	Begin Normal Crown	-2.00%	-2.00%
127	11+625.23m	Begin Normal Shoulder	-2.00%	-2.00%
128	11+616.78m	End Normal Shoulder	-2.00%	-2.00%
128	11+631.13m	End Normal Crown	-2.00%	-2.00%
128	11+640.69m	Level Crown	-2.00%	0.00%
128	11+650.26m	Reverse Crown	-2.00%	2.00%
128	11+662.69m	Begin Full Super	-4.60%	4.60%
128	11+739.47m	End Full Super	-4.60%	4.60%
128	11+751.90m	Reverse Crown	-2.00%	2.00%
128	11+761.47m	Level Crown	-2.00%	0.00%
128	11+771.03m	Begin Normal Crown	-2.00%	-2.00%
128	11+785.38m	Begin Normal Shoulder	-2.00%	-2.00%
129	11+773.23m	End Normal Shoulder	-2.00%	-2.00%
129	11+787.35m	End Normal Crown	-2.00%	-2.00%

Superelevation Region	Station	Description	Left Outside Lane	Right Outside Lane
129	11+796.76m	Level Crown	0.00%	-2.00%
129	11+806.17m	Reverse Crown	2.00%	-2.00%
129	11+812.76m	Begin Full Super	3.40%	-3.40%
129	11+948.05m	End Full Super	3.40%	-3.40%
129	11+954.64m	Reverse Crown	2.00%	-2.00%
129	11+964.05m	Level Crown	0.00%	-2.00%
129	11+973.46m	Begin Normal Crown	-2.00%	-2.00%
129	11+987.58m	Begin Normal Shoulder	-2.00%	-2.00%
	12+078.36m	End Alignment	-2.00%	-2.00%

KHYBER PAKHTUNKHWA INTEGRATED TOURISM AND ENTERPRISE DEVELOPMENT PROJECT C&W DEPARTMENT, KP

NATIONAL ENGINEERING SERVICES PAKISTAN (PVT.) LTD.

REV.	DATE	DESCRIPTION	APPROVED	
				DRAWN
				SUBMITTED
				RECOMMENDED
				CHD./VER.
				APPROVED

PROJECT: UPGRADATION OF MANKIAL BADA SERI ROAD SWAT

TITLE: SUPERELEVATION SCHEME

DATE: JANUARY 2021

DWG NO. 4169/(iii)/TD SS006

1. GENERAL:

1.1 SPECIFIC TO PROJECT ONLY AND SHOULD BE READ IN CONJUNCTION WITH THE PROJECT SPECIFICATIONS, STRUCTURAL ENGINEERING DRAWINGS, RELEVANT CONTRACT CONDITINS AND ENGINEER'S INSTRUCTIONS.

1.2 ALL DRAWINGS SHALL BE CO-ORDINATED WITH OTHER SPECIALTY DRAWINGS / DETAILS. ANY DISCREPANCY, ERROR OR RECTIFICATION IF REQUIRED, SHALL BE BROUGHT TO THE NOTICE OF THE ENGINEER FOR NECESSARY APPROVAL.

1.3 ALL DIMENSIONS ARE IN MILLIMETRES AND ELEVATIONS IN METRES. UNLESS SPECIFIED OTHERWISE.

1.4 ALL ELEVATIONS SHOWN ON DRAWINGS ARE FINISHED SURFACE LEVELS UNLESS NOTED OTHERWISE.

1.5 ALL EXPOSED CONCRETE CORNERS, EDGES AND ANGLES SHALL BE CHAMFERED OR FILLETED 20mm x 20 mm UNLESS SPECIFIED OTHERWISE.

1.6 THE CONTRACTOR SHALL SUBMIT, COMPLETE METHODOLOGY FOR DIFFERENT WORK ITEMS LIKE EXCAVATION/BACKFILLING, DEWATERING/DRAINAGE, CONCRETING, JOINTS ETC FOR APPROVAL OF ENGINEER.

1.7 ALL EXPOSED SURFACES SHALL HAVE CLASS 1 SURFACE FORM FINISH UNLESS SPECIFIED OTHERWISE.

2. MATERIALS:

2.1 ALL THE MATERIALS AND WORKMANSHIP SHALL BE ACCORDING TO THE AASHTO SPECIFICATIONS AND ASTM STANDARDS EXCEPT WHERE MODIFIED BELOW, OR IN "PARTICULAR SPECIFICATIONS AND SPECIAL PROVISIONS" OF TENDER DOCUMENTS.

2.2 CONCRETE

CONCRETE CLASSIFICATION AND STRENGTHS SHALL BE AS PER TABLE GIVEN BELOW:

CONCRETE	CLASS	28 DAYS (15Cm X 30 Cm) CYLINDER STRENGTH Kg/Sq.Cm
CULVERT (TOP SLAB), BOTTOM SLAB, WALLS		
BRIDGES (PIER, PILES, PILES CAP, TRANSOM, ABUTMENT CAP WING WALL	1 : 1 : 2	(4000 psi)
APPROACH SLAB, CUTOFF WALL	1 : 2 : 4	(3000 psi)
LEAN	1 : 3 : 6	(1,500 psi)

2.3 REINFORCEMENT

REINFORCING STEEL SHALL BE DEFORMED ROUND BARS OF INTERMEDIATE GRADE (GRADE 60) CONFORMING TO AASHTO M-31 (ASTM A-615) WITH MINIMUM YIELD STRENGTH OF 4,200 Kg/Sq.Cm (60,000 Psi).

3. CONCRETE COVER:

THE MINIMUM COVER TO REINFORCEMENT SHALL BE AS UNDER UNLESS SPECIFIED OTHERWISE.

- TOP SLAB
  - TOP..... 40 mm
  - BOTTOM ..... 25 mm
- APPROACH SLAB
  - BOTTOM ..... 50 mm
  - TOP ..... 75 mm
- WALLS
  - EARTH SIDE ..... 50 mm
  - OTHER SIDE ..... 40 mm

4. FOUNDATIONS:

4.1 ALL THE EXCAVATION FOR OPEN FOUNDATIONS / BOX CULVERTS SHALL BE SUBJECTED TO INSPECTION BY THE ENGINEER PRIOR TO POURING OF CONCRETE.

4.2 BEHIND THE ABUTMENT AND WING WALLS, COMPACTED GRANULAR BACKFILL SHALL BE PLACED IN LAYERS OF THICKNESS APPROPRIATE TO THE COMPACTION EQUIPMENT ENSURING A MINIMUM IN SITU COMPACTION OF 95% MODIFIED PROCTOR.

5. JOINTS:

5.1 THE CONTRACTOR SHALL SUBMIT COMPLETE LAYOUT AND DETAILS OF ALL CONSTRUCTION JOINTS FOR APPROVAL OF THE ENGINEER.

5.2 CONCRETE IN DECK SLAB SHALL BE PLACED IN FULL WIDTH. NO CONSTRUCTION JOINT SHALL BE PERMITTED. DIAPHRAGMS AND DECK SLAB SHALL BE CAST MONOLITHICALLY. EXCEPT AS SHOWN ON DRAWING AT LOCATION FOR INSTALLATION OF EXPANSION JOINTS.

5.3 CONCRETE FOR THE BARRIERS AND SIDEWALKS SHALL BE PLACED NO SOONER THAN 20 DAYS AFTER PLACING OF CONCRETE.

6. BAR BENDING SCHEDULE

DETAILED BAR BENDING SCHEDULE SHALL BE PREPARED BY THE CONTRACTOR AND SUBMITTED FOR ENGINEER'S APPROVAL. LAP LENGTHS AND STANDARD HOOKS SHALL BE AS GIVEN BELOW:

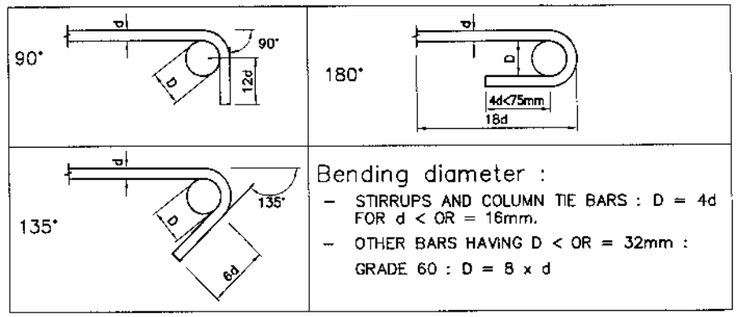

Bending diameter :

- STIRRUPS AND COLUMN TIE BARS : D = 4d FOR d < OR = 16mm.
- OTHER BARS HAVING D < OR = 32mm : GRADE 60 : D = 8 x d

7. TENDER DOCUMENTS, DRAWINGS & CONSTRUCTION DRAWINGS:

7.1 TENDER DRAWINGS ISSUED WITH TENDER DOCUMENTS ARE TO APPRAISE THE BIDDERS OF THE GENERAL NATURE & FAIR IDEA OF THE WORK TO PREPARE BOQ & TENDER DOCUMENTS. ENGINEER SHALL ISSUE THE DETAILED CONSTRUCTION DRAWINGS & SUCH FIELD SKETCHES FROM TIME TO TIME AS NECESSARY FOR THE EASE OF CONSTRUCTION.

7.2 THE CONTRACTOR SHALL CHECK ALL CONSTRUCTION DRAWINGS AND CONTRACT DOCUMENTS CAREFULLY AS SOON AS PRACTICABLE AFTER RECEIPT THERE OF, AND SHALL PROMPTLY ADVICE THE ENGINEER'S REP OF ANY ERRORS OR OMISSIONS THERE IN PRIOR TO START OF ANY CONSTRUCTION ACTIVITIES.

8. SCAFFOLDING:

ALL SCAFFOLDING SHALL BE DESIGNED BY THE CONTRACTOR & THE TRAFFIC MOVEMENT UNDERNEATH SUCH SCAFFOLDING MAY REMAIN UNOBSTRUCTED.

9. LIST OF SYMBOLS AND ABBREVIATIONS:

B	=	BOTTOM
◯B.H	=	BORE HOLE
C. JT.	=	CONSTRUCTION JOINT
℄	=	CENTRELINE
C/C	=	CENTER TO CENTER
DIA.	=	DIAMETER
EXP. JT.	=	EXPANSION JOINT
E.F	=	EACH FACE
ELE.	=	ELEVATION
F.F	=	FAR FACE
G.I	=	GALVANIZED IRON
ID	=	INTERNAL DIAMETER
I.F	=	INNER FACE
m	=	METER
mm	=	MILLIMETER
N.F	=	NEAR FACE
N.S.L	=	NATURAL SURFACE LEVEL
P.G.L	=	PROFILE GRADE LEVEL
SYM.	=	SYMMETRICAL
T	=	TOP
TH.	=	THICK
TYP.	=	TYPICAL
θ	=	SKEW ANGLE IN DEGREES

TABLE NO.1

(i) SPLICE LENGTH IN TENSION

(a) TOP BARS

fc' Kg/cm² \ Bar Size	SPLICE LENGTH mm								
	#3	#4	#5	#6	#7	#8	#9	#10	#11
210	710	945	1180	1410	2060	2355	2645	2940	3240
280	610	820	1020	1225	1780	2040	2995	2550	2805
350	425	565	705	845	1215	1390	1565	1765	1960

(b) OTHER BARS

fc' Kg/cm² \ Bar Size	SPLICE LENGTH mm								
	#3	#4	#5	#6	#7	#8	#9	#10	#11
210	550	730	905	1085	1590	1815	2035	2265	2490
280	475	630	790	945	1375	1570	1765	1960	2160
350	325	435	540	650	935	1070	1205	1360	1505

(ii) SPLICE LENGTH IN COMPRESSION

SPLICE LENGTH (mm) IN COMPRESSION (Fy=4220Kg/cm²)									
Bar Size	#3	#4	#5	#6	#7	#8	#9	#10	#11
Splice Length	300	380	480	575	670	765	860	955	1050

(iii) EMBEDMENT LENGTH IN TENSION

(a) TOP BARS

fc' Kg/cm² \ Bar Size	SPLICE LENGTH mm								
	#3	#4	#5	#6	#7	#8	#9	#10	#11
210	545	730	910	1090	1590	1820	2050	2310	2565
280	475	630	785	945	1360	1555	1755	1975	2190
350	425	565	705	845	1215	1390	1565	1765	1960

(b) OTHER BARS

fc' Kg/cm² \ Bar Size	SPLICE LENGTH mm								
	#3	#4	#5	#6	#7	#8	#9	#10	#11
210	420	560	700	840	1225	1400	1580	1775	1970
280	365	485	605	725	1045	1195	1350	1520	1685
350	325	435	540	650	935	1070	1205	1360	1505

SHAPE CODE	METHOD OF MEASUREMENT OF BENDING DIMENSIONS	TOTAL LENGTH OF BAR (L) MEASURED ALONG CENTERLINE	SKETCH AND DIMENSIONS TO BE GIVEN IN SCHEDULE
1.		A	Straight
2.		A+H	
3.		A+2H	
4.		A+B	
5.		A+2B	
6.	R(standard)	A+B−½R−d	
7.		A+B+C−R−2d	
8.		A+B+C+D+E−2R−4d	
9.		A+B+C−R−2d	
10.		A+B+C+D−1½R−3d	
11.		A+B+C+D+E−R−2d	
12.		A+B+C+D−½R−d	
13.		A+B+C+D+E−½R−d	
14.		2(A+B+C)+D−R−2d	
15.		(C/B)*3.14*(A+d)+8d Where, B is not greater than A/3. d = dia of bar.	HELIX A = internal dia.(mm) B = pitch of helix(mm) C = overall height(mm)
16.		A+B	

SHAPE CODE	METHOD OF MEASUREMENT OF BENDING DIMENSIONS	TOTAL LENGTH OF BAR (L) MEASURED ALONG CENTERLINE	SKETCH AND DIMENSIONS TO BE GIVEN IN SCHEDULE
17.		A+B+C Where D is at least 2 diameters	
18.		A+2B+C+E If angle with horizontal is 45° or less	
19.		A+B+C+D+E−R−2d	
20.		2A+1.14B	
21.		2A+B+20d	
22.		A+B+C+D+E−2R−4d	
23.		A+2B+C+10d	
24.		A+lap	
25.		2A+2B+22d	
26.		A+B+0.57C+D−½R−2.57d	
27.		2A+B+20d	
28.		2A+2B+C+20d	
29.		A+B+C+10d	
30.		πA+20d	
31.		A+B+C+D−½R−d	
32.		2(A+B+C)+D−R−2d	

SHAPE CODE	METHOD OF MEASUREMENT OF BENDING DIMENSIONS	TOTAL LENGTH OF BAR (L) MEASURED ALONG CENTERLINE	SKETCH AND DIMENSIONS TO BE GIVEN IN SCHEDULE
33.		A+0.57B+C	
34.		A+B+C+D If angle with horizontal is 45° or less	
35.		A+B+C−½R−d	
36.		A+B+C If angle with horizontal is 45° or less	
37.		A+B+C+D−1½R−3d	
38.		A+B+C+D+E If angle with horizontal is 45° or less	
39.		A	
40.		A+B+C+D+E+F−½R−d	
41.		A+B+C	
42.		A+2B+2C−2R−4d	
43.		A+2B+2C−2R−4d	
44.		A+2B+2C−R−2d	
45.		A+2(B+C+D)−R−2d	
46.		2(A+B+C)+D−R−2d	
47.		A+B+C+D+E−2R−4d	
48.		A+B+C−½R−d	

SHAPE CODE	METHOD OF MEASUREMENT OF BENDING DIMENSIONS	TOTAL LENGTH OF BAR (L) MEASURED ALONG CENTERLINE	SKETCH AND DIMENSIONS TO BE GIVEN IN SCHEDULE
49		2A+2B+C+2D−R−2d	
50.		A+B	
51.		A+2B+2C−2R−4d	
52.		A+2B−R−2d	
53.		A+B+C	
54.		A+B+C+D−1½R−3d	
55.		A+B+C+D+E	
56.		A+B+C+D−½R−d	
57.		A+B+C+D+E−2½R−3d	
58.		A+B+C+D−R+32d	
59.		A+B+C−½R−d	
60.		2(A+B)+C−R−2d	
61.		A+2B+C+D−R−2d	

NOTES:

1− "e" AND "d" ARE THE DIAMETER OF REINFORCEMENTS.
2− "R" IS THE RADIUS OF BEND IN RADIANS.

KHYBER PAKHTUNKHWA INTEGRATED TOURISM AND ENTERPRISE DEVELOPMENT PROJECT
C&W DEPARTMENT, KP

NATIONAL ENGINEERING SERVICES PAKISTAN (PVT.) LTD.

REV.	DATE	DESCRIPTION	APPROVED	APPROVED
				DRAWN
				SUBMITTED
				RECOMMENDED
				CHD./VER.

PROJECT: CONSTRUCTION OF MANKIAL BADA SERA ROAD PROJECT (22 Km)

TITLE: REBAR SHAPE CODE

DATE: JANUARY, 2021

DWG NO. 38164/102/TD/RS0013

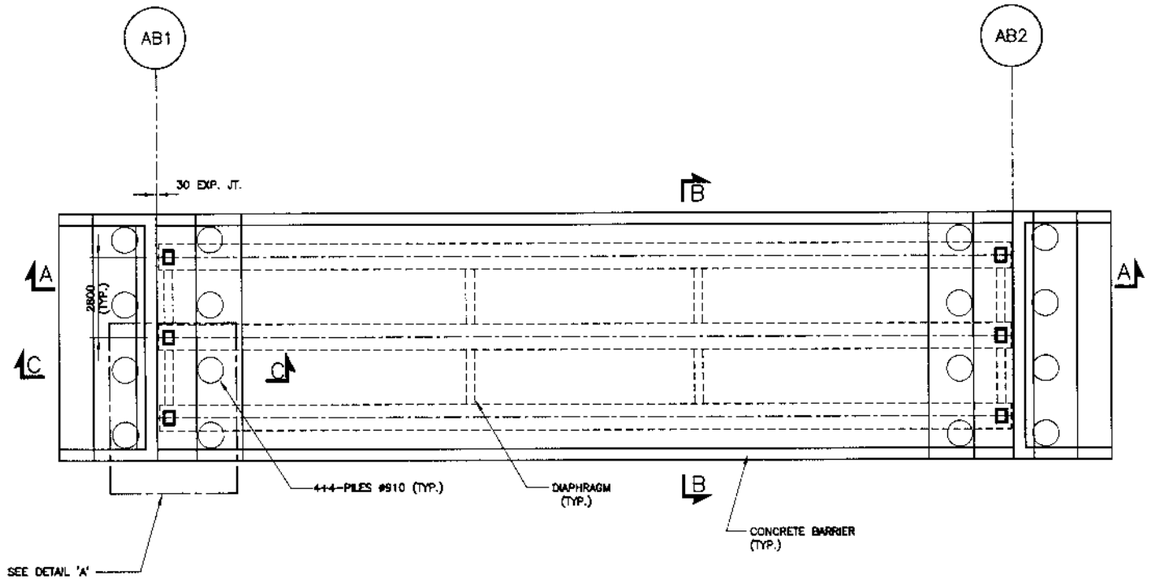

PLAN

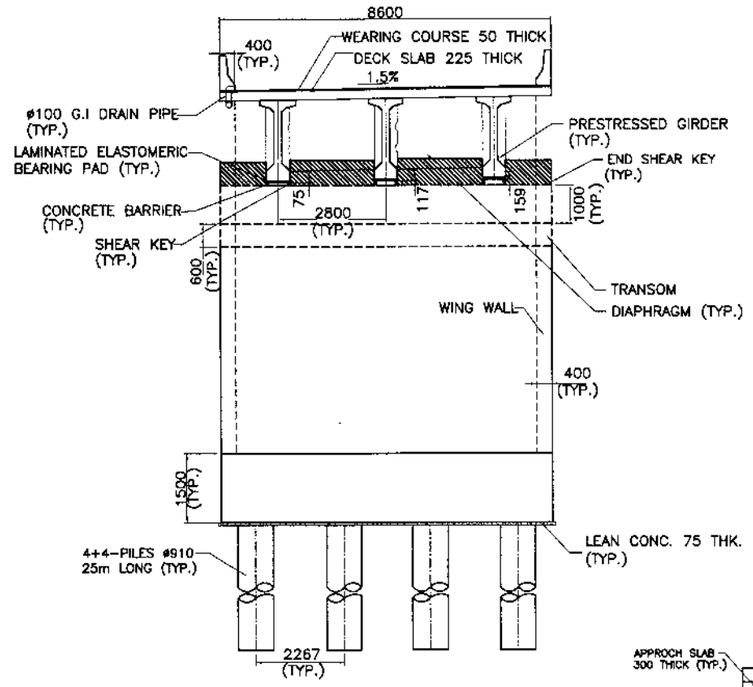

SECTION B-B
SCALE 1:100

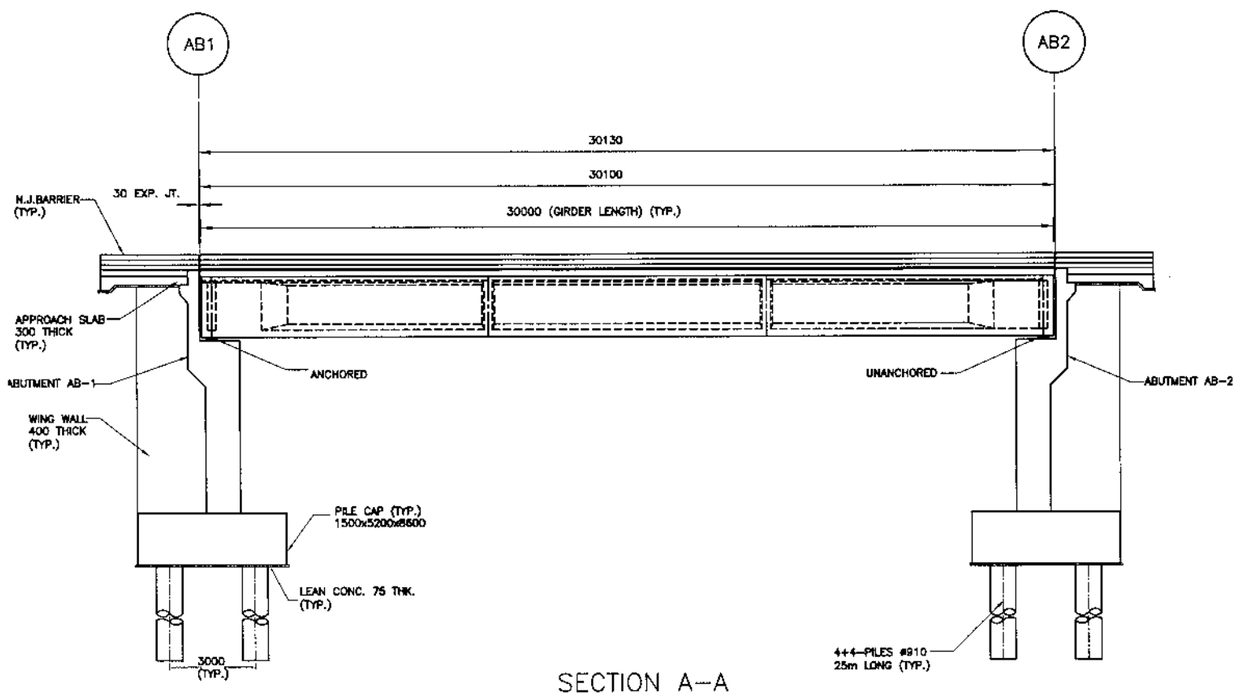

SECTION A-A

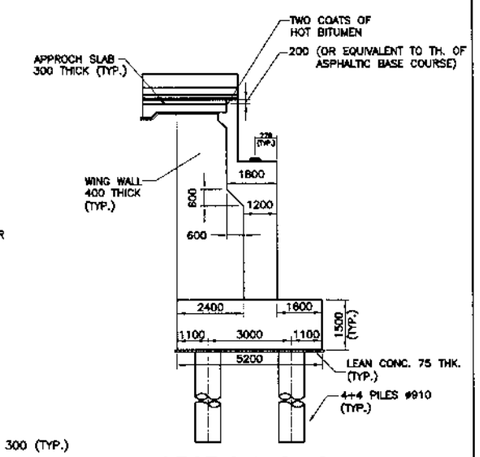

SECTION C-C
SCALE 1:100

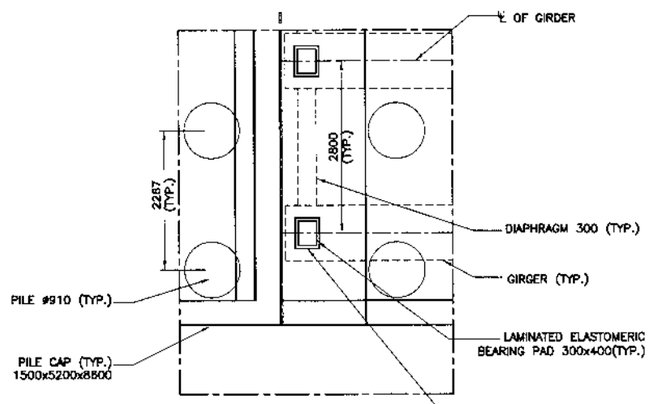

DETAIL 'A'
SCALE 1:50

NOTES:

1. FOR GENERAL NOTES REFER DWG. NO. P1GNS0012
2. WORK THIS DRAWING IN CONJUNCTION WITH OTHER RELEVANT DRAWINGS.
3. LENGTH OF PILE SHOWN ARE AS PER GEOTECH REPORTS OF THE SAME BRIDGE AND SHALL BE FINALIZED AFTER PILE LOAD TEST RESULTS.

KHYBER PAKHTUNKHWA INTEGRATED TOURISM AND ENTERPRISE DEVELOPMENT PROJECT C&W DEPARTMENT, KP

NATIONAL ENGINEERING SERVICES PAKISTAN (PVT.) LTD.

REV.	DATE	DESCRIPTION	APPROVED

DRAWN	
SUBMITTED	
RECOMMENDED	
CHD./VER.	
APPROVED	

PROJECT: CONSTRUCTION OF MANKIAL BADA SERA ROAD PROJECT (22 Km)

TITLE: GENERAL ARRANGEMENT PLAN, ELEVATION AND SECTION BRIDGE-4+150, 4+820, 5+645 & 7+335

DATE: JANUARY, 2021

DWG NO. 4169 (iii)/102/TD/P1G001

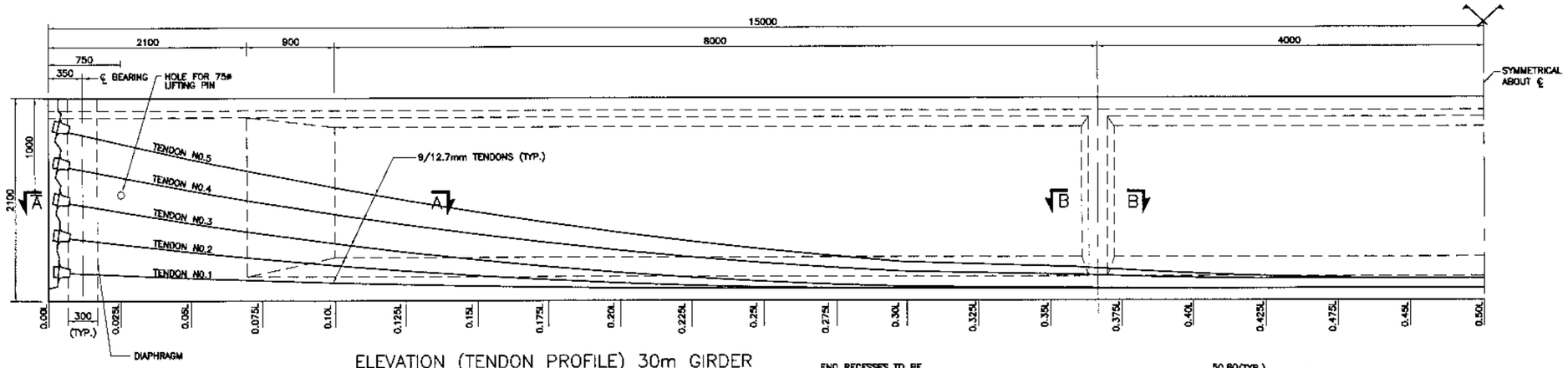

ELEVATION (TENDON PROFILE) 30m GIRDER

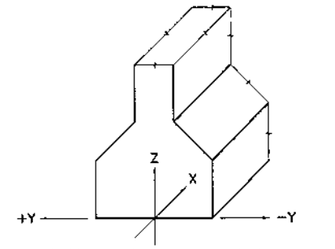

REFERENCE CO-ORDINATES

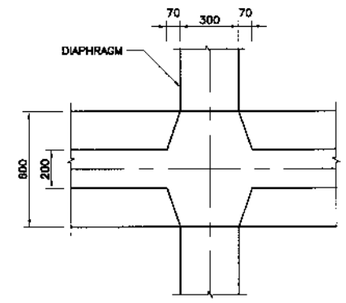

SECTIONAL PLAN B-B
SCALE 1:15

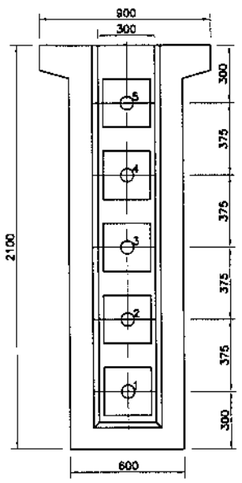

END VIEW OF GIRDER
SCALE 1:15

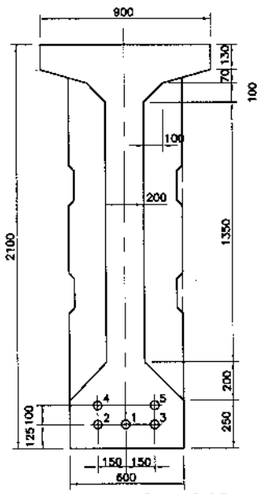

SECTION AT MIDSPAN
SCALE 1:15

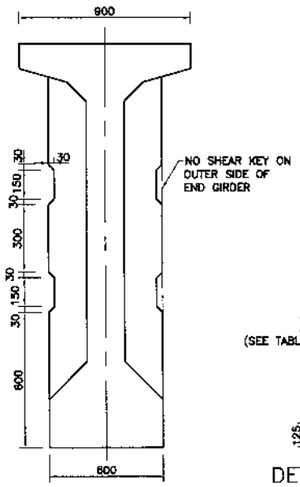

SECTION AT DIAPHRAGM
SCALE 1:15

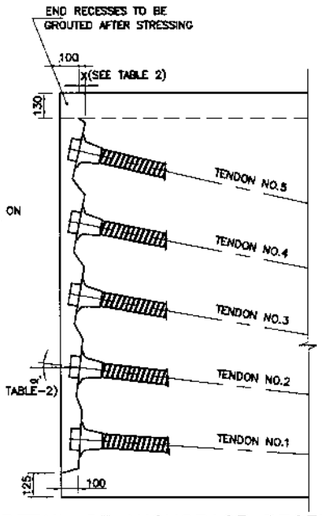

DETAIL OF ANCHORAGE RECESSES
SCALE 1:15

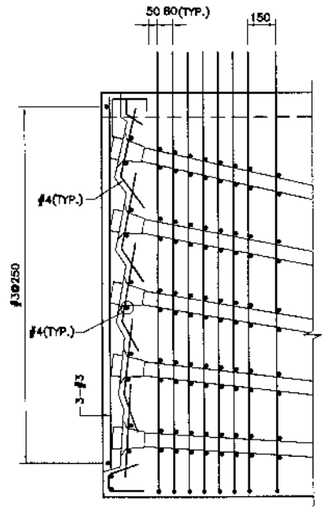

BURSTING REINF. DETAIL
SCALE 1:15

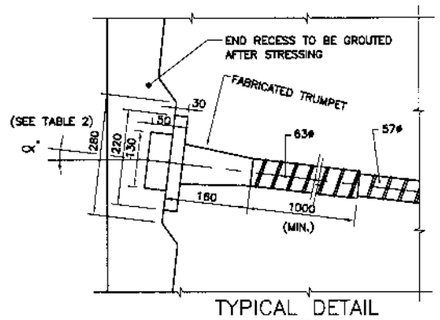

TYPICAL DETAIL
(ANCHORAGE RECESS)

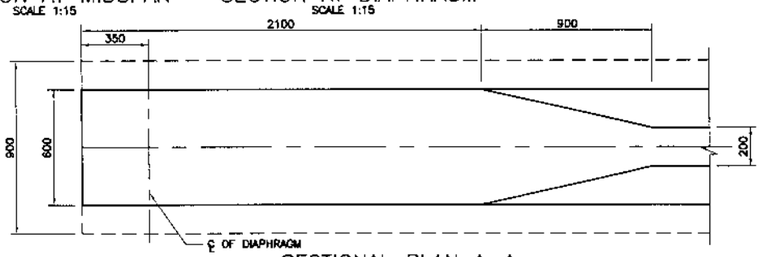

SECTIONAL PLAN A-A
SCALE 1:15

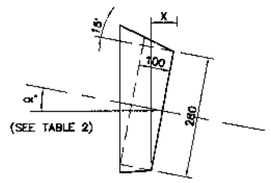

ANCHORAGE RECESS DETAILS

TABLE-1

JACKING FORCE = 126 Tons.

TENDON NO.		DATA FOR GIRDER																					EXTENSION AT EACH END (mm)	SEQUENCE OF STRESSING
		END 0.00	0.025L	0.05L	0.075L	0.10L	0.125L	0.15L	0.175L	0.20L	0.225L	0.25L	0.275L	0.30L	0.325L	0.35L	0.375L	0.40L	0.425L	0.45L	0.475L	0.50L		
1	Z	300	283	267	251	237	223	211	199	188	178	169	160	153	146	141	136	132	129	127	125	125	102	A
	Y	0	0	0	0	0	0	0	0	0	0	0	0	0	0	0	0	0	0	0	0	0		
2	Z	675	621	571	522	477	434	395	357	323	291	263	238	213	192	175	159	147	137	131	126	125	101	B
	Y	0	0	0	0	0	0	0	0	0	0	-25	-45	-60	-80	-90	-100	-120	-130	-140	-145	-150		
3	Z	1050	960	874	793	717	645	578	518	458	405	356	312	273	238	208	183	162	146	134	127	125	100	C
	Y	0	0	0	0	0	0	0	0	0	0	25	45	60	80	90	100	120	130	140	145	150		
4	Z	1425	1308	1197	1092	993	900	813	732	657	588	525	468	417	372	333	300	273	252	237	228	225	99	D
	Y	0	0	0	0	0	0	0	0	0	0	0	0	0	-15	-25	-50	-75	-110	-130	-145	-150		
5	Z	1800	1648	1501	1363	1233	1111	997	890	792	701	619	544	477	418	367	323	286	260	241	229	225	98	E
	Y	0	0	0	0	0	0	0	0	0	0	0	0	0	15	25	50	75	110	130	145	150		

TABLE-2

ANCHORAGE RECESS DATA		
TENDON NO.	ANGLE α°	X (mm)
1	1° 20' 11"	7
2	4° 12' 00"	21
3	7° 03' 49"	35
4	9° 09' 49"	45
5	12° 01' 38"	60

NOTES:

1. FOR GENERAL NOTES REFER DRAWING No. GNS0012.
2. THE FOLLOWING VALUES HAVE BEEN ASSUMED IN THE CALCULATION OF THEORETICAL ELONGATION/EXTENSION (Ao) OF TENDONS:
   MODULUS OF ELASTICITY, E=1,968,700 Kg/Sq.Cm (28,000) ksi)
   COEFFICIENT OF CURVATURE FRICTION=0.25 PER RADIAN
   WOBBLE FRICTION COEFFICIENT=0.0033 PER METER
   ANY DEVIATION FROM THE ABOVE VALUES SHALL BE REPORTED TO THE ENGINEER.
3. STRESSING SHALL BE STOPPED AS SOON AS ONE OF THE FOLLOWING CONDITIONS IS FULFILLED:
   - STRESS REACHES 0.75 TIMES GUARANTEED ULTIMATE TENSILE STRENGTH (GUTS)
   - ACTUAL ELONGATION/EXTENSION REACHES 1.10 Ao.
   - IF AT 0.75 GUTS ACTUAL ELONGATION IS STILL BELOW 0.95 Ao STRESSING SHALL BE PROCEEDED UPTO MAXIMUM OF 0.80 GUTS.
   - IN THE EVENT OF NON-CONFORMANCE OF ABOVE, THE CABLE MAY BE REPLACED.
4. TENDON EXTENSION GIVEN IN TABLE IS FOR THE JACKING END.
5. STRESSING OF GIRDERS SHOULD BE DONE FROM BOTH ENDS.

KHYBER PAKHTUNKHWA INTEGRATED TOURISM AND ENTERPRISE DEVELOPMENT PROJECT
C&W DEPARTMENT, KP

NATIONAL ENGINEERING SERVICES PAKISTAN (PVT.) LTD.

REV.	DATE	DESCRIPTION	APPROVED

DRAWN
SUBMITTED
RECOMMENDED
CHD./VER.
APPROVED

PROJECT:
CONSTRUCTION OF MANKIAL BADA SERA ROAD PROJECT (22 Km)

TITLE: 30m PRESTRESSED GIRDER CONC. OUTLINE & PRESTRESSING DETAILS BRIDGE AT 4+150, 4+820, 5+645 &7+335

DATE: JANUARY, 2021

DWG NO. 38164/102/TD/PIG002

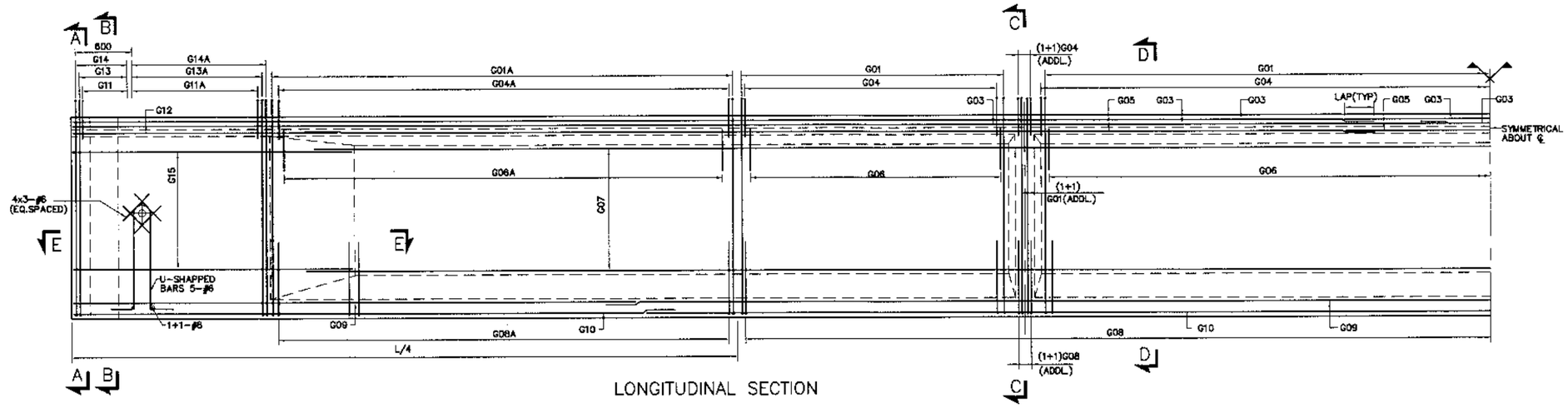

LONGITUDINAL SECTION

REINFORCEMENT SCHEDULE

MARK	BAR DIA. @ SPACING
G01	#4@300
G01A	#4@175
G02	4-#4
G03	2#4(E.F)
G04	#4@300
G04A	#4@175
G05	#4(E.F)
G06	#4@300
G06A	#4@175
G07	4-#4(E.F)
G08	#4@300
G08A	#4@175
G09	#4(E.F)
G10	6-#6
G11	#4@60
G11A	#4@150
G12	#4(E.F)
G13	#4@60
G13A	#4@150
G14	#4@60
G14A	#4@150
G15	4-#4(E.F)
G16	10x10-#4
G16A	10x7-#4
G17	#4@150
G18	6-#4
G19	#4@300
G20	#4@60/150
G21	#4@250

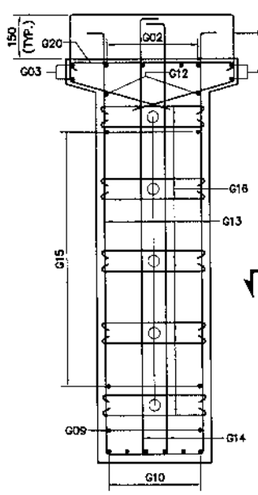

SECTION A–A
SCALE 1:15

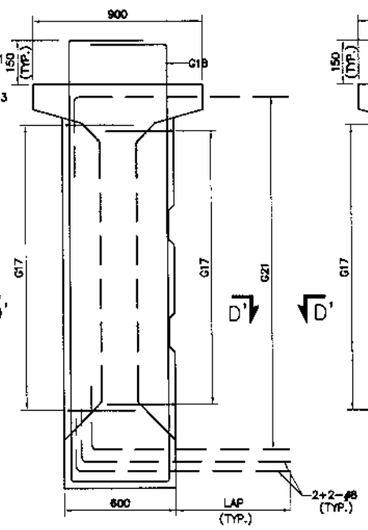

SECTION B–B
(FOR EXTERIOR GIRDER)
(EXTERIOR DIAPHRAGM)
SCALE 1:15

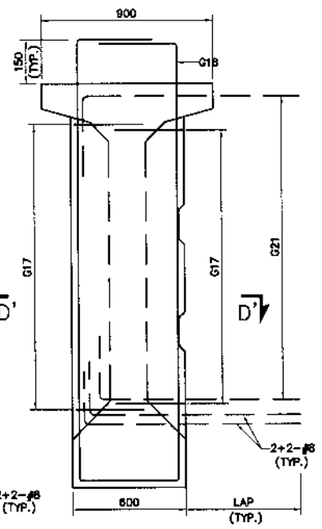

SECTION C–C
(FOR EXTERIOR GIRDER)
(INTERIOR DIAPHRAGM)
SCALE 1:15

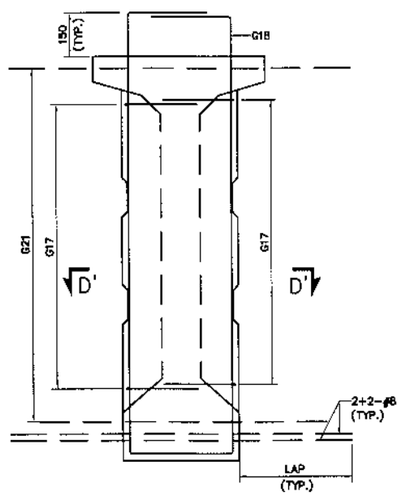

SECTION B–B
(FOR INTERIOR GIRDER)
(EXTERIOR DIAPHRAGM)
SCALE 1:15

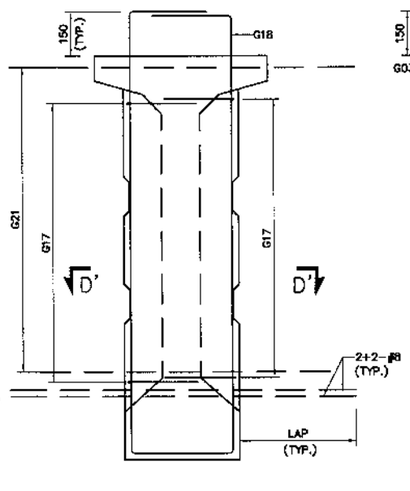

SECTION C–C
(FOR INTERIOR GIRDER)
(INTERIOR DIAPHRAGM)
SCALE 1:15

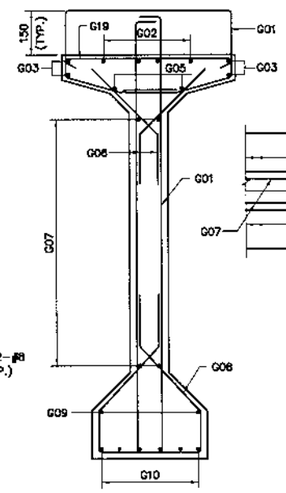

SECTION D–D
SCALE 1:15

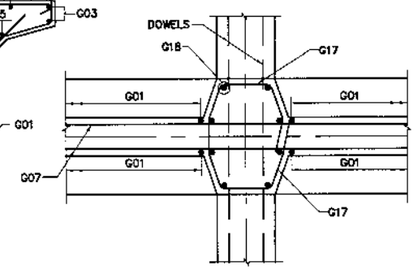

SECTIONAL PLAN D'–D'
(FOR INTERIOR GIRDER)
SCALE 1:15

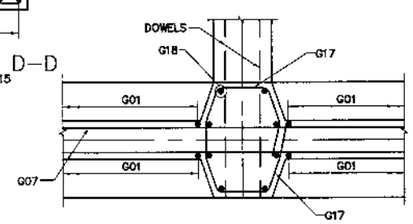

SECTIONAL PLAN D'–D'
(FOR EXTERIOR GIRDER)
SCALE 1:15

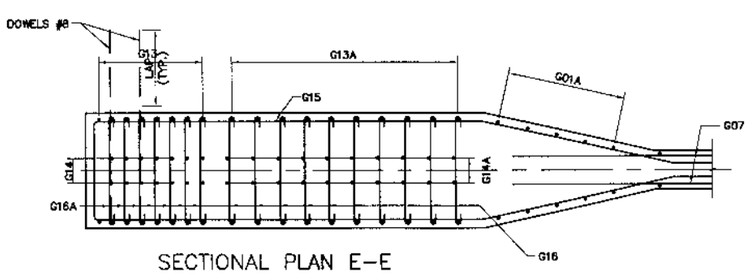

SECTIONAL PLAN E–E
(FOR EXTERIOR GIRDER)
SCALE 1:15

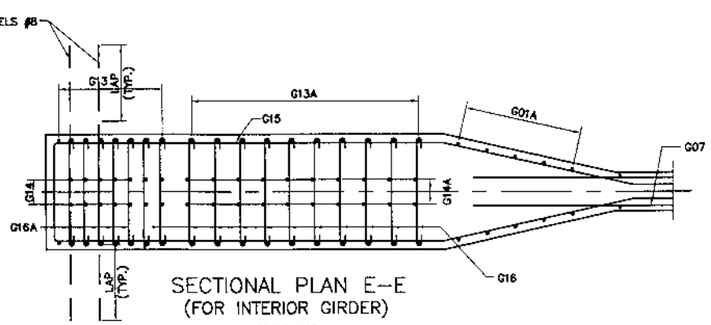

SECTIONAL PLAN E–E
(FOR INTERIOR GIRDER)
SCALE 1:15

NOTES:

1. FOR GENERAL NOTES REFER DWG. NO. GNS0012.
2. ALL PRESTRESSED CONCRETE SHALL BE CLASS D1.
3. REINFORCED CONCRETE SHALL BE DEFORMED ROUND BARS OF (GRADE 60) CONFORMING TO AASHTO M-31(ASTM A-615) WITH MINIMUM YIELD STRENGTH OF 4200 Kg/Sq.Cm (60,000psi).

KHYBER PAKHTUNKHWA INTEGRATED TOURISM AND ENTERPRISE DEVELOPMENT PROJECT
C&W DEPARTMENT, KP

NATIONAL ENGINEERING SERVICES PAKISTAN (PVT.) LTD.

REV.	DATE	DESCRIPTION	APPROVED	
				DRAWN
				SUBMITTED
				RECOMMENDED
				CHD./VER.
				APPROVED

PROJECT: CONSTRUCTION OF MANKIAL BADA SERA ROAD PROJECT (22 Km)

TITLE: 30m PRESTRESSED GIRDER REINFORCEMENT
BRIDGE AT 4+150, 4+820, 5+645 & 7+335

DATE: JANUARY, 2021

DWG NO. 38164/102/TD/P1G003

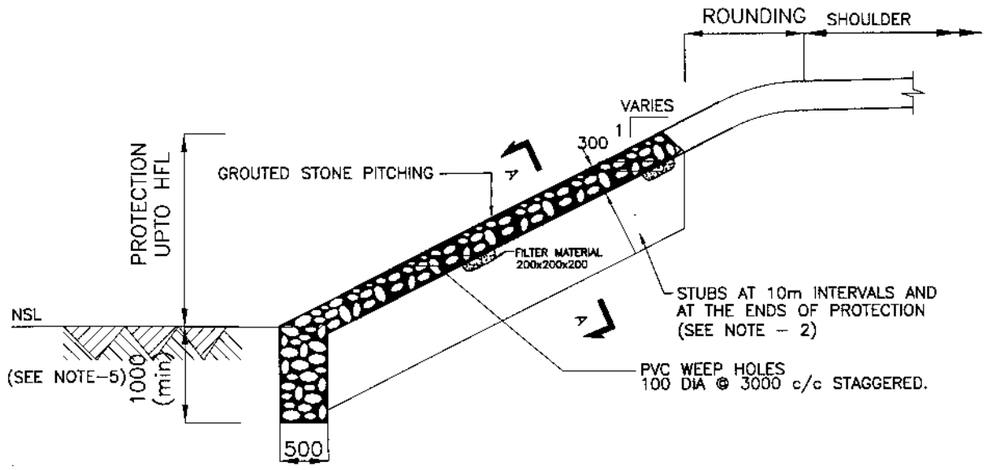

EMBANKMENT PROTECTION

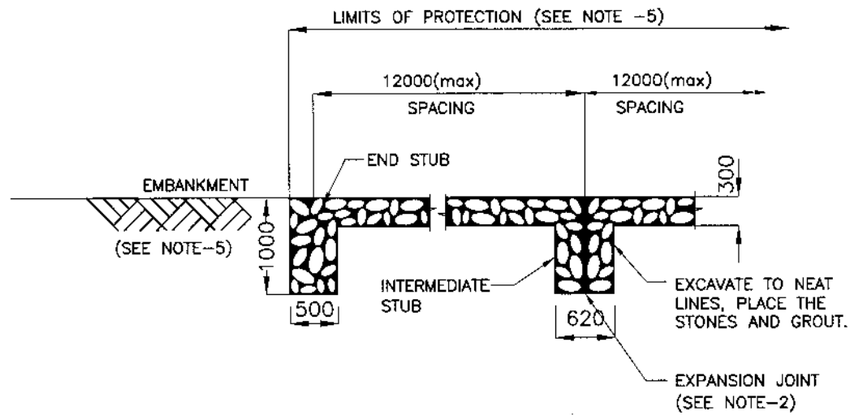

SECTION A - A

NOTES

1. ALL DIMENSIONS ARE IN MILLIMETERS UNLESS NOTED OTHERWISE.
2. EXPANSION JOINT IN MORTARED RIPRAP SHALL BE PROVIDED AT AN MAXIMUM INTERVAL OF 10m. TYPE OF MATERIAL TO BE USED SHALL BE AS APPROVED BY THE ENGINEER. NO SEPRATE PAYMENT SHALL BE MADE FOR PROVISION AND FIXATION OF EXPANSION JOINTS AND WEEP HOLES.
3. SUPPLY AND ERECTION OF STEEL ANGLE STAKES SHALL BE PROVIDED AS SHOWN ON DRAWINGS AT NO EXTRA COST TO THE EMPLOYER.
4. IN CASE ROCK IS ENCOUNTERED DEPTH OF PROTECTION WORKS SHALL BE ADJUSTED AS DIRECTED BY THE ENGINEER (MINIMUM DEPTH IN ROCK SHALL BE KEPT 300MM)
5. LOCATION & HEIGHT OF PROTECTION WORKS SHALL BE DECIDED BY THE ENGINEER ON COMPLETION OF EMBANKMENT WORKS.

KHYBER PAKHTUNKHWA INTEGRATED TOURISM AND ENTERPRISE DEVELOPMENT PROJECT C&W DEPARTMENT, KP	NATIONAL ENGINEERING SERVICES PAKISTAN (PVT.) LTD.					DRAWN		PROJECT: CONSTRUCTION OF MANKIAL BADA SERA ROAD PROJECT (22 Km)	TITLE: MISCELLANEOUS PROTECTION DETAILS	
						SUBMITTED				
						RECOMMENDED				
						CHD./VER.				
		REV.	DATE	DESCRIPTION	APPROVED	APPROVED			DATE JANUARY, 2021	DWG NO. 38164/102/TD/0014

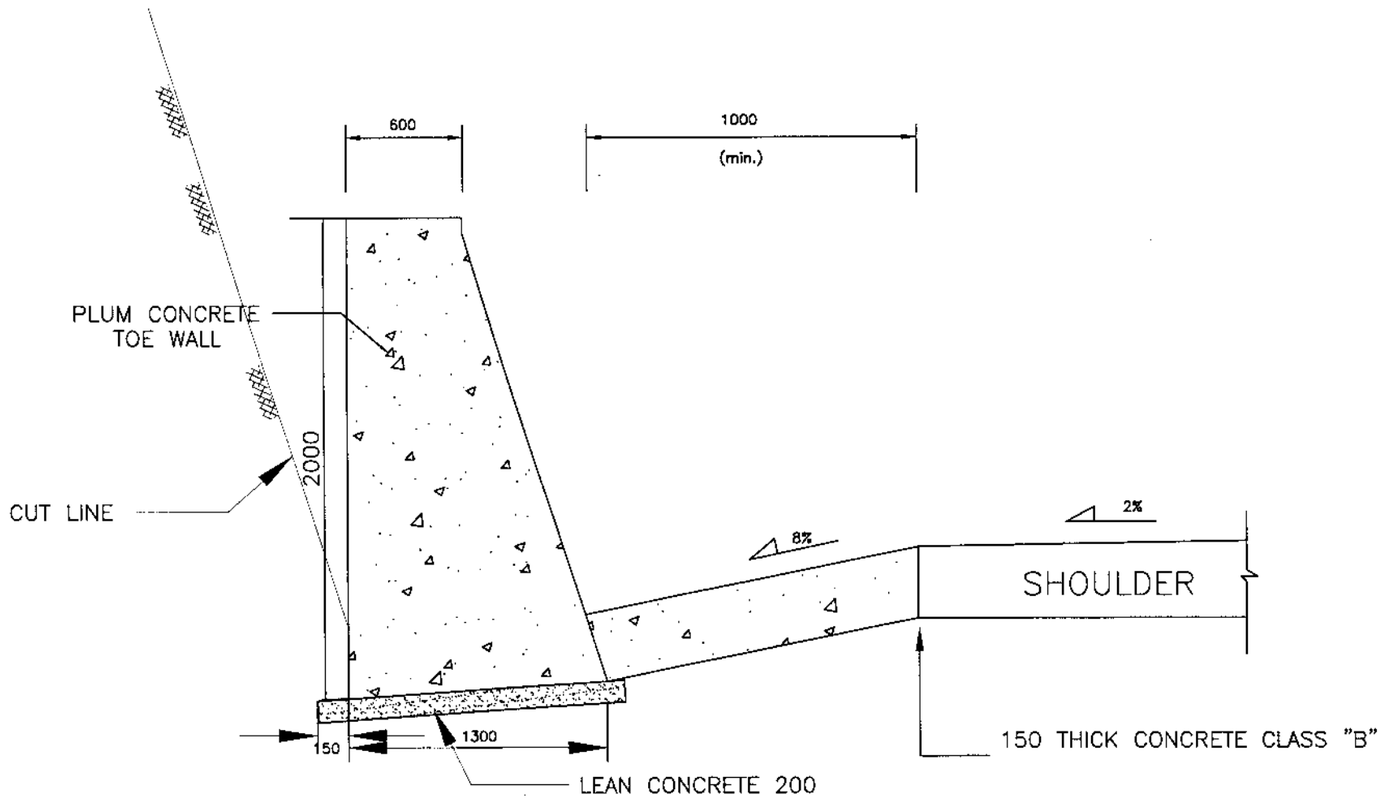

TYPE(Ib)
(In Common Rock)

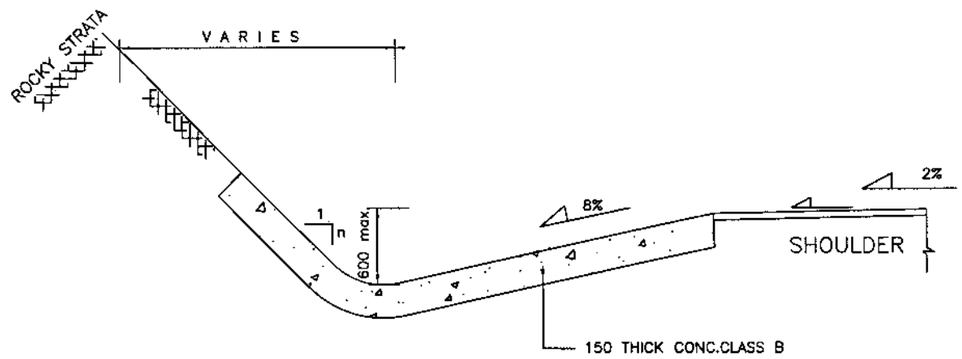

TYPE(Ia)

NOTES: –

1. ALL DIMENSIONS ARE IN MILLIMETERS UNLESS OTHERWISE SPECIFIED.
2. INVERT LEVEL OF DRAIN SHALL GENERALLY FOLLOW PROFILE GRADE AND SHALL BE CONNECTED TO ADJOINING CULVERTS/CHUTES.
3. ACTUAL TYPE ,LOCATION, LENGTH, SLOPE AND INVERT LEVEL OF DRAIN SHALL BE AS APPROVED BY THE ENGINEER PRIOR TO CONSTRUCTION AT SITE.
4. TOE WALL ALONG DRAIN TYPE(1b) SHALL BE PROVIDED WITH PLUM CONCRETE. WHERE HEIGHT EXCEEDING 2M, THE BASE SHOULD BE FOLLOWED AS PER DWG 4169/102/TD/ RW011.

KHYBER PAKHTUNKHWA INTEGRATED TOURISM AND ENTERPRISE DEVELOPMENT PROJECT C&W DEPARTMENT, KP	NATIONAL ENGINEERING SERVICES PAKISTAN (PVT.) LTD.					DRAWN	PROJECT: CONSTRUCTION OF MANKIAL BADA SERA ROAD PROJECT (22 Km)	TITLE TYPICAL DRAIN DETAIL
						SUBMITTED		
						RECOMMENDED		DATE JANUARY, 2021 / DWG NO. 38164/102/TD/D0015
						CHD./VER.		
		REV.	DATE	DESCRIPTION	APPROVED	APPROVED		

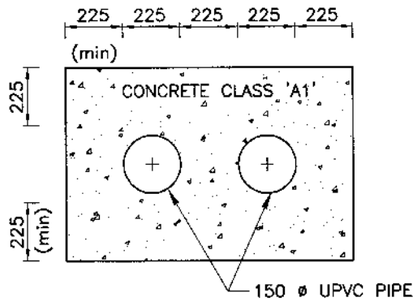

(FUTURE DUCTS FOR ELECTRICAL CABLES)

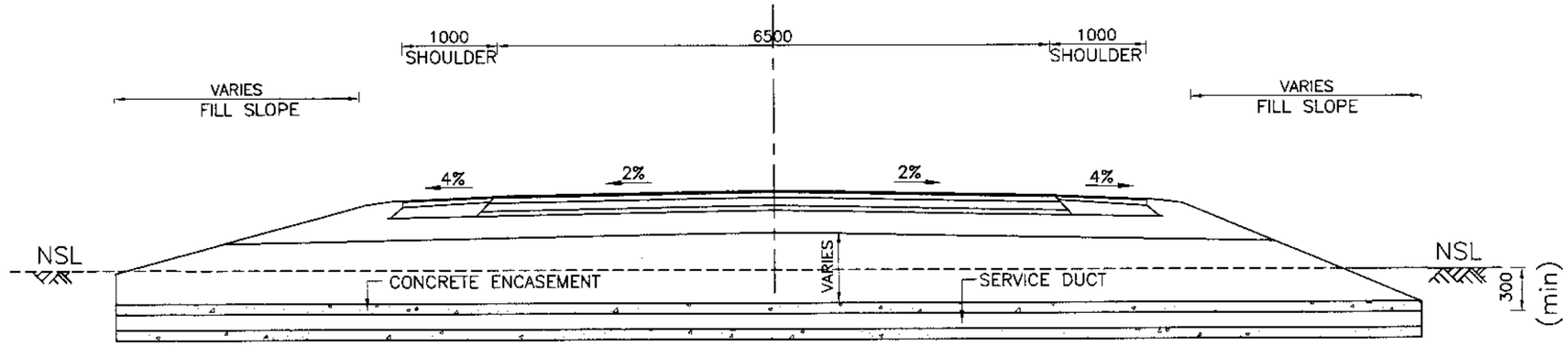

TYPICAL CROSS SECTION OF SERVICE DUCTS ACROSS

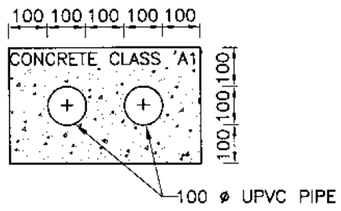

(FUTURE DUCTS FOR TELEPHONE CABLES TWO WAY)

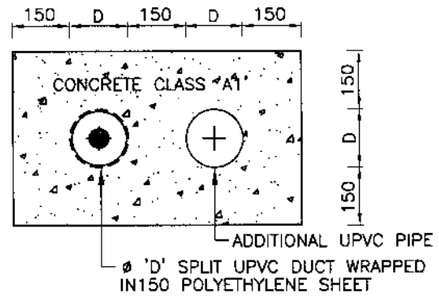

DUCT FOR PROTECTION OF EXISTING SERVICES

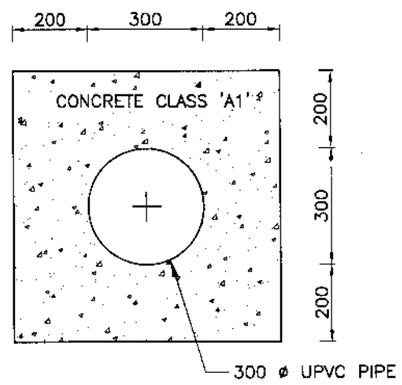

(FUTURE DUCTS FOR WATER LINES)

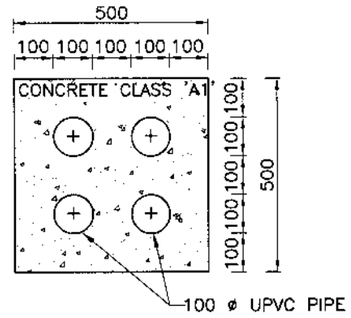

(FUTURE DUCTS FOR TELEPHONE CABLES 4 WAY)

NOTES

1. ALL DIMENSIONS ARE IN MILLIMETERS, UNLESS NOTED OTHERWISE.
2. SERVICE DUCTS WILL BE PROVIDED AS PER SITE REQUIREMENT. POSITION OF SERVICE DUCTS SHALL BE COORDINATED BY THE CONTRACTOR WITH THE CONCERNED AUTHORITY DURING CONSTRUCTION WITH APPROVAL OF THE ENGINEER'S REPRESENTATIVE.

KHYBER PAKHTUNKHWA INTEGRATED TOURISM AND ENTERPRISE DEVELOPMENT PROJECT C&W DEPARTMENT, KP	NES PAK NATIONAL ENGINEERING SERVICES PAKISTAN (PVT.) LTD.				DRAWN		PROJECT: CONSTRUCTION OF MANKIAL BADA SERA ROAD PROJECT (22 Km)	TITLE DETAILS OF SERVICE DUCTS
					SUBMITTED			
					RECOMMENDED			
					CHD./VER.			DATE JANUARY, 2021 / DWG NO. 38164/102/TD/D0016
		REV.	DATE	DESCRIPTION	APPROVED	APPROVED		

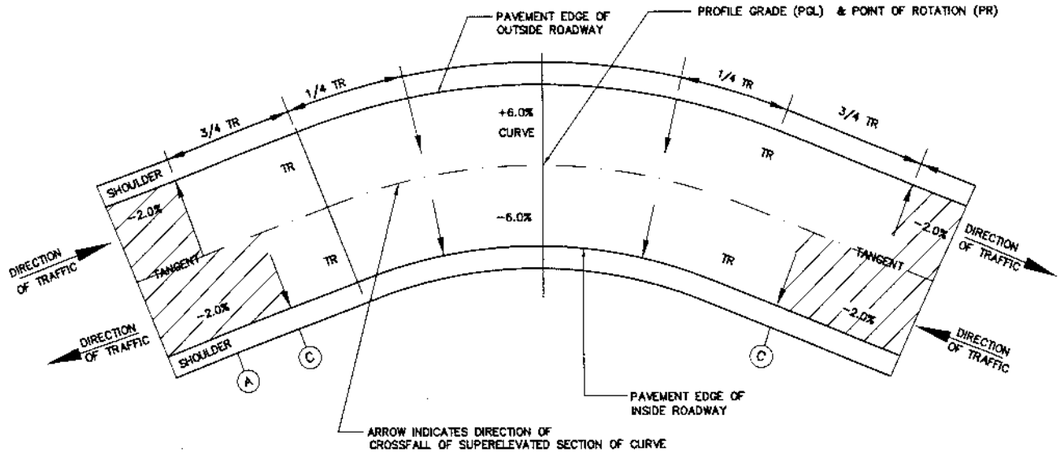

PLAN OF TYPICAL SUPERELEVATION TRANSITION

TABLE–I

RELATIVE SLOPE FOR SUPERELEVATED EDGE (S%)

DESIGN SPEED "Km / Hr"	2 LANE ROAD	1 LANE RAMP	2 LANE RAMP
50	0.67	0.80	1.00
80	0.50		
100	0.45		
120*	0.40		

* VALUE TO BE ADOPTED FOR THIS PROJECT.

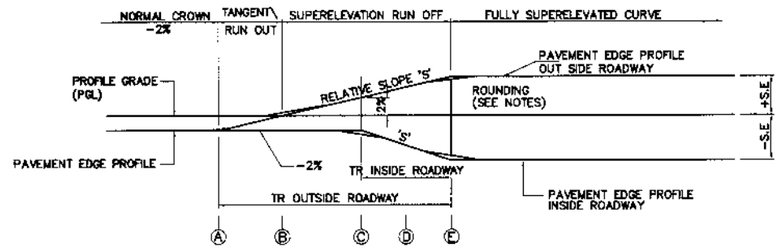

PROFILE OF TYPICAL EDGE SUPERELEVATION TRANSITIONS

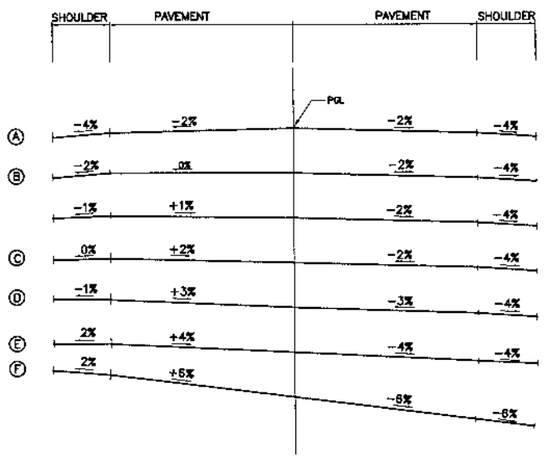

SECTIONS OF TYPICAL DISTRIBUTION OF SUPERELEVATION

NOTES :–

1. ALL DIMENSIONS ARE IN MILLIMETERS UNLESS OTHERWISE SHOWN.
2. ALL SUPERELEVATION RATES ARE EXPRESSED IN UNITS PER HUNDRED (%).
3. PROFILE GRADE LINE (PGL) AND POINT OF ROTATION (PR) SHALL BE AS SHOWN IN THE TYPICAL CROSS SECTION.
4. FOLLOWING SIGN CONVENTION FOR SUPERELEVATION RATE ARE APPLICABLE
   (–) WHEN LEFT EDGE OF PAVEMENT OR SHOULDER, IN DIRECTION OF TRAFFIC IS LOWER THAN RIGHT EDGE.
   (+) WHEN LEFT EDGE OF PAVEMENT OR SHOULDER, IN DIRECTION OF TRAFFIC, IS HIGHER THAN RIGHT EDGE.
5. EDGE PROFILES OF SUPERELEVATED PAVEMENT AND SHOULDERS SHALL BE FREE FROM IRREGULARITIES, ROUNDING AT POINTS A,C & E SHALL BE ACHIEVED USING A 20 METER MINIMUM VERTICAL CURVE.
6. THE FORMULAE USED FOR CALCULATION OF INNER & OUTER TRs ARE AS UNDER:–

   (I). LENGTH OF TR $= \frac{\text{REQUIRED S.E+CROSS SLOPE}}{\text{S FACTOR}} \times$ PAVEMENT WIDTH TO BE ROTATED

   (II). 'S' FACTOR IS TAKEN FROM TABLE–I. THE LENGTH OF TRs ARE INDICATED ON PLAN & PROFILE SHEETS, WHICH MAY BE ADJUSTED AS PER SITE CONDITIONS AND/OR AS APPROVED BY THE ENGINEER'S REPRESENTATIVE.
7. THE RATE OF SUPERELEVATION (S.E) IS RESTRICTED TO A MAXIMUM OF 6%.

KHYBER PAKHTUNKHWA INTEGRATED TOURISM AND ENTERPRISE DEVELOPMENT PROJECT C&W DEPARTMENT, KP

NATIONAL ENGINEERING SERVICES PAKISTAN (PVT.) LTD.

REV.	DATE	DESCRIPTION	APPROVED

DRAWN
SUBMITTED
RECOMMENDED
CHD./VER.
APPROVED

PROJECT: CONSTRUCTION OF MANKIAL BADA SERA ROAD PROJECT (22 Km)

TITLE: **TYPICAL SUPERELEVATION DETAILS**

DATE: JANUARY, 2021

DWG NO. 38164/102/TD/ TS0018

T1

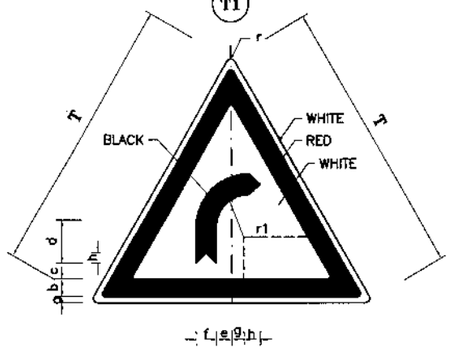

RIGHT BEND
DIMENSION(cm)

PARTS	SIGN SIZE	
	90cm	120cm
r	3.5	4.7
a	1.0	1.3
b	6.5	8.7
c	4.0	5.3
d	11.5	15.3
e	8.5	11.3
f	7.0	9.3
g	6.0	8.0
h	3.5	4.7
r1	12.5	16.7

T2

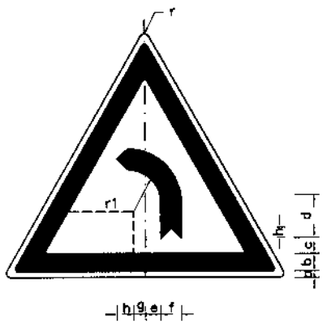

LEFT BEND
DIMENSION(cm)

PARTS	SIGN SIZE	
	90cm	120cm
r	3.5	4.7
a	1.0	1.3
b	6.5	8.7
c	4.0	5.3
d	11.5	15.3
e	8.5	11.3
f	7.0	9.3
g	6.0	8.0
h	3.5	4.7
r1	12.5	16.7

T3

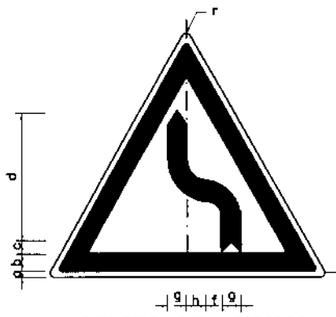

SERIES OF CURVES
(FIRST TO LEFT)
DIMENSION(cm)

PARTS	SIGN SIZE	
	90cm	120cm
r	3.5	4.7
a	1.0	1.3
b	6.5	8.7
c	3.0	4.0
d	33.0	44.0
e	14.0	18.7
f	8.0	10.7
g	7.0	9.3
h	2.0	2.7
i	3.5	4.7
r1	4.5	6.0

T4

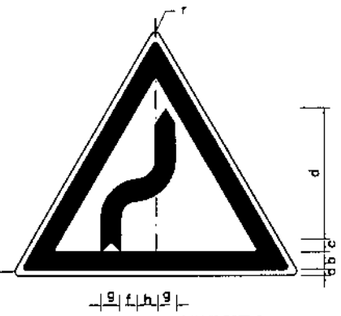

SERIES OF CURVES
(FIRST TO RIGHT)
DIMENSION(cm)

PARTS	SIGN SIZE	
	90cm	120cm
r	3.5	4.7
a	1.0	1.3
b	6.5	8.7
c	3.0	4.0
d	33.0	44.0
e	14.0	18.7
f	8.0	10.7
g	7.0	9.3
h	2.0	2.7
i	3.5	4.7
r1	4.5	6.0

T5

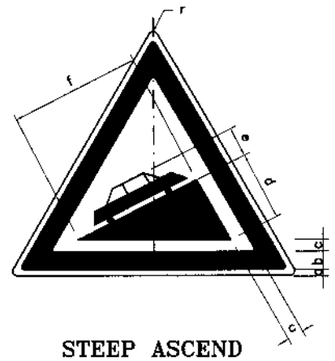

STEEP ASCEND
DIMENSION(cm)

PARTS	SIGN SIZE	
	90cm	120cm
r	3.5	4.7
a	1.0	1.3
b	6.5	8.7
c	3.5	4.7
d	23.5	31.3
e	11.5	15.3
f	33.0	44.0

T6

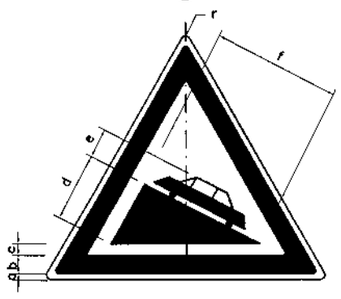

STEEP DESCEND
DIMENSION(cm)

PARTS	SIGN SIZE	
	90cm	120cm
r	3.5	4.7
a	1.0	1.3
b	6.5	8.7
c	3.5	4.7
d	23.5	31.3
e	11.5	15.3
f	33.0	44.0

T7

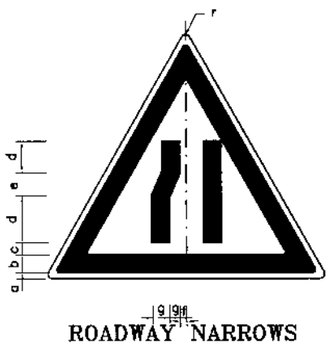

ROADWAY NARROWS
(FROM LEFT)
DIMENSION(cm)

PARTS	SIGN SIZE	
	90cm	120cm
r	3.5	4.7
a	1.0	1.3
b	6.5	8.7
c	3.5	4.7
d	10.0	13.3
e	14.0	18.7
f	2.5	3.3
g	5.0	6.7

T8

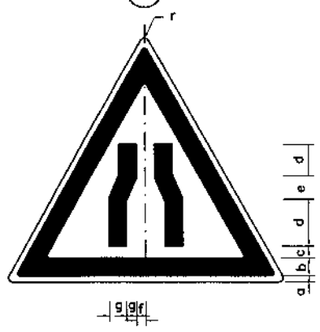

ROADWAY NARROWS
DIMENSION(cm)

PARTS	SIGN SIZE	
	90cm	120cm
r	3.5	4.7
a	1.0	1.3
b	6.5	8.7
c	3.5	4.7
d	10.0	13.3
e	14.0	18.7
f	2.5	3.3
g	5.0	6.7

T9

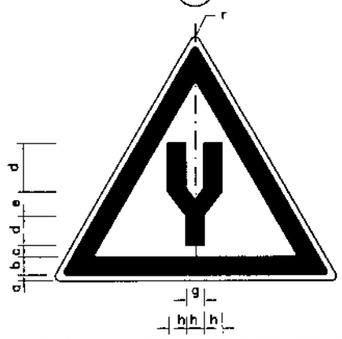

DUAL CARRIAGEWAY STARTS
DIMENSION(cm)

PARTS	SIGN SIZE	
	90cm	120cm
r	3.5	4.7
a	1.0	1.3
b	6.5	8.7
c	4.5	6.0
d	15.0	20.0
e	9.0	12.0
f	12.0	16.0
g	9.0	12.0
h	7.0	9.3

T10

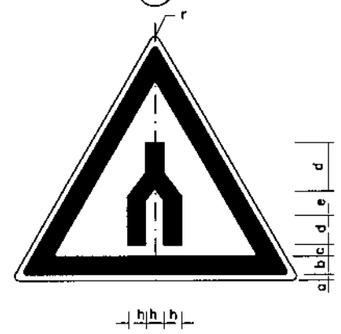

DUAL CARRIAGEWAY ENDS
DIMENSION(cm)

PARTS	SIGN SIZE	
	90cm	120cm
r	3.5	4.7
a	1.0	1.3
b	6.5	8.7
c	4.0	5.30
d	15.0	20.0
e	9.0	12.0
f	12.0	16.0
g	9.0	12.0
h	7.0	9.3

KHYBER PAKHTUNKHWA INTEGRATED TOURISM AND ENTERPRISE DEVELOPMENT PROJECT C&W DEPARTMENT, KP

NATIONAL ENGINEERING SERVICES PAKISTAN (PVT.) LTD.

REV.	DATE	DESCRIPTION	APPROVED	
				DRAWN
				SUBMITTED
				RECOMMENDED
				CHD./VER.
				APPROVED

PROJECT: CONSTRUCTION OF MANKIAL BADA SERA ROAD PROJECT (22 Km)

TITLE: **ROAD SIGNS (1)**
(INFORMATORY SIGN)

DATE: JANUARY, 2021

DWG NO. 38164/102/TD/ RS0019

T11

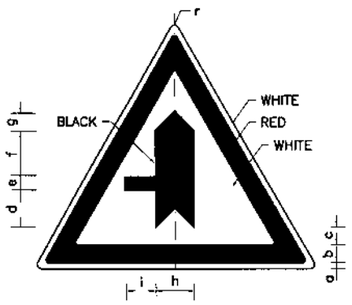

MINOR ROAD FROM LEFT

DIMENSION(cm)

PARTS	Sign Size	
	90cm	120cm
r	3.5	4.7
a	1.0	1.3
b	6.5	8.7
c	3.0	4.0
d	13.5	18.0
e	5.5	7.3
f	15.0	20.0
g	7.0	9.3
h	14.0	18.7
i	10.5	14.0

T12

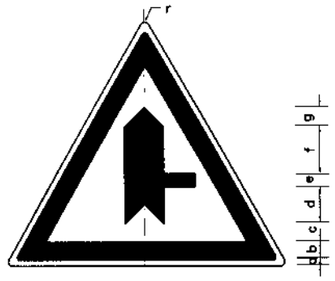

MINOR ROAD FROM RIGHT

DIMENSION(cm)

PARTS	Sign Size	
	90cm	120cm
r	3.5	4.7
a	1.0	1.3
b	6.5	8.7
c	3.0	4.0
d	13.5	18.0
e	5.5	7.3
f	15.0	20.0
g	7.0	9.3
h	14.0	18.7
i	10.5	14.0

T13

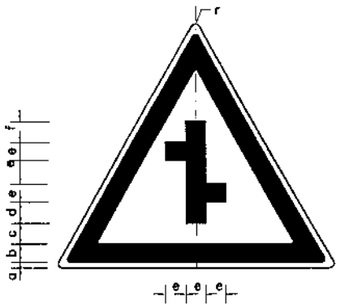

MINOR ROAD CROSSING WITH AN OFFSET

DIMENSION(cm)

PARTS	Sign Size	
	90cm	120cm
r	3.5	4.7
a	1.0	1.3
b	6.5	8.7
c	2.5	3.3
d	8.0	10.7
e	7.5	10.0
f	9.0	12.0

T14

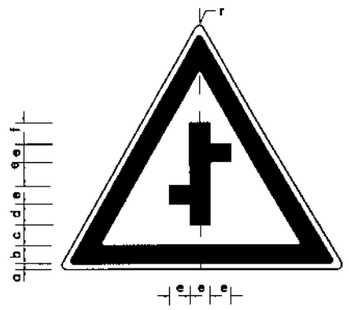

MINOR ROAD CROSSING WITH AN OFFSET

DIMENSION(cm)

PARTS	Sign Size	
	90cm	120cm
r	3.5	4.7
a	1.0	1.3
b	6.5	8.7
c	2.5	3.3
d	8.0	10.7
e	7.5	10.0
f	9.0	12.0

T15

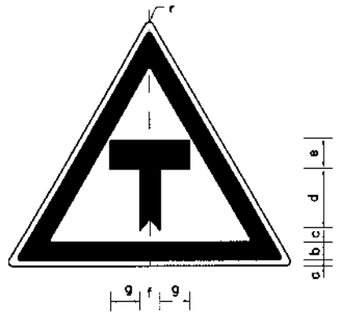

T– JUNCTION AHEAD

DIMENSION(cm)

PARTS	Sign Size	
	90cm	120cm
r	3.5	4.7
a	1.0	1.3
b	6.5	8.7
c	3.0	4.0
d	15.5	20.7
e	7.0	9.3
f	5.0	6.7
g	11.0	14.7
h	2.5	3.3

T16

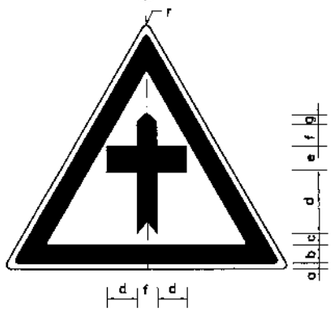

CROSS ROAD AHEAD

DIMENSION(cm)

PARTS	Sign Size	
	90cm	120cm
r	3.5	4.7
a	1.0	1.3
b	6.5	8.7
c	3.0	4.0
d	13.0	17.3
e	7.0	9.3
f	10.0	13.3
g	2.5	3.3
i	5.0	6.7

T17

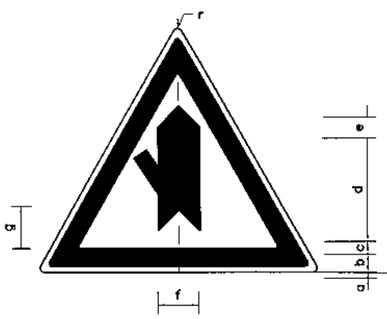

MINOR ROAD FROM LEFT

DIMENSION(cm)

PARTS	Sign Size	
	90cm	120cm
r	3.5	4.7
a	1.0	1.3
b	6.5	8.7
c	3.5	4.7
d	33.0	44.0
e	7.0	9.3
f	14.0	18.7
g	15.0	20.0
h	3.0	4.0
i	5.5	7.3

T18

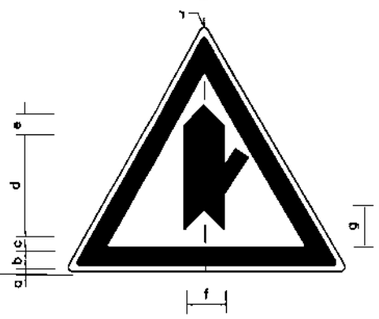

MINOR ROAD FROM RIGHT

DIMENSION(cm)

PARTS	Sign Size	
	90cm	120cm
r	3.5	4.7
a	1.0	1.3
b	6.5	8.7
c	3.5	4.7
d	33.0	44.0
e	7.0	9.3
f	14.0	18.7
g	15.0	20.0
h	3.0	4.0
i	5.5	7.3

T19

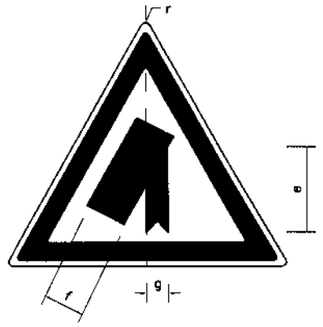

MAIN ROAD (ON LEFT)

DIMENSION(cm)

PARTS	Sign Size	
	90cm	120cm
r	3.5	4.7
a	1.0	1.3
b	6.5	8.7
c	2.5	3.3
d	39.0	52.0
e	27.0	36.0
f	13.0	17.3
g	5.0	6.7

T20

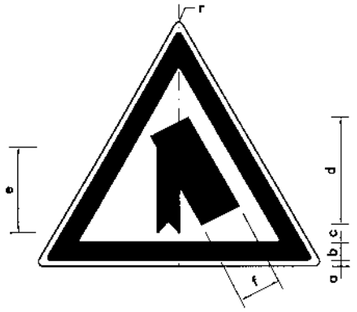

MAIN ROAD (ON RIGHT)

DIMENSION(cm)

PARTS	Sign Size	
	90cm	120cm
r	3.5	4.7
a	1.0	1.3
b	6.5	8.7
c	2.5	3.3
d	39.0	52.0
e	27.0	36.0
f	13.0	17.3
g	5.0	6.7

KHYBER PAKHTUNKHWA INTEGRATED TOURISM AND ENTERPRISE DEVELOPMENT PROJECT C&W DEPARTMENT, KP

NATIONAL ENGINEERING SERVICES PAKISTAN (PVT.) LTD.

REV.	DATE	DESCRIPTION	APPROVED	
				DRAWN
				SUBMITTED
				RECOMMENDED
				CHD./VER.
				APPROVED

PROJECT: CONSTRUCTION OF MANKIAL BADA SERA ROAD PROJECT (22 Km)

TITLE: **ROAD SIGNS (2) (INFORMATORY SIGN)**

DATE: JANUARY, 2021

DWG NO. 38164/102/TD/ RS0020

T21

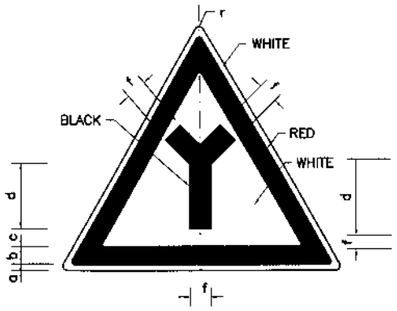

Y-JUNCTION

DIMENSION(cm)

PARTS	Sign Size	
	90cm	120cm
r	3.5	4.7
a	1.0	1.3
b	6.5	8.7
c	3.0	4.0
d	17.0	22.7
e	13.0	17.3
f	7.0	9.3

T22

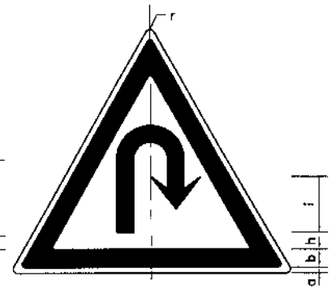

U-TURN

DIMENSION(cm)

PARTS	Sign Size	
	90cm	120cm
r	3.5	4.7
a	1.0	1.3
b	6.5	8.7
c	5.5	7.3
d	7.0	9.3
e	5.0	6.7
f	2.5	3.3
g	23.0	30.7
h	7.5	10.0
i	12.0	16.0

T23

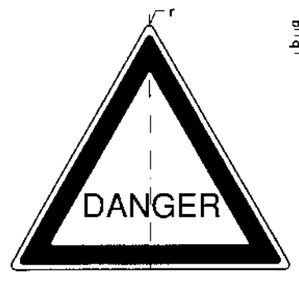

DANGER WARNING

DIMENSION(cm)

PARTS	Sign Size	
	90cm	120cm
r	3.5	4.7
a	1.0	1.3
b	6.5	8.7
c	6.5	8.7
d	7.0	9.5

T24

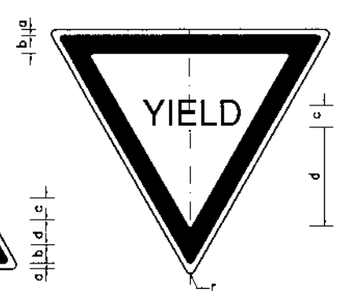

GIVE WAY

DIMENSION(cm)

PARTS	Sign Size	
	90cm	120cm
r	3.5	4.7
a	1.0	1.3
b	6.5	8.7
c	6.5	8.7
d	16.0	21.3

T25

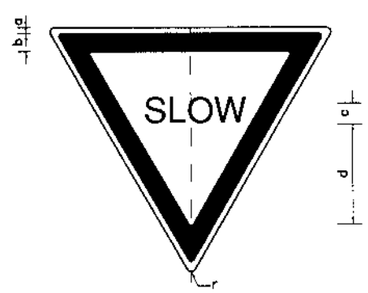

SLOW

DIMENSION(cm)

PARTS	Sign Size	
	90cm	120cm
r	3.5	4.7
a	1.0	1.3
b	6.5	8.7
c	6.5	8.7
d	16.0	21.3

T26

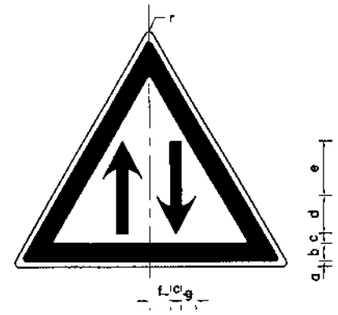

TWO WAY TRAFFIC

DIMENSION(cm)

PARTS	Sign Size	
	90cm	120cm
r	3.5	4.7
a	1.0	1.3
b	6.5	8.7
c	4.0	8.7
d	9.0	21.3
e	19.0	21.3
f	5.0	21.3
g	3.5	21.3

T27

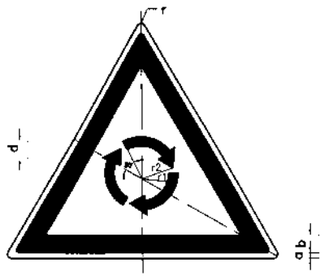

ROUNDABOUT

DIMENSION(cm)

PARTS	Sign Size	
	90cm	
r	3.5	120
a	1.0	–
b	6.5	–
c	3.0	–
d	9.0	–
r1	12.0	–
r2	16.0	–

T28

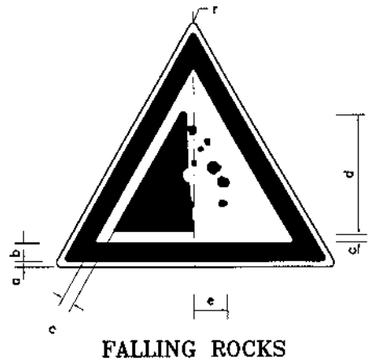

FALLING ROCKS

DIMENSION(cm)

PARTS	Sign Size	
	90cm	120cm
r	3.5	4.7
a	1.0	1.3
b	6.5	8.7
c	3.5	4.7
d	38.0	50.7
e	12.0	16.0

T29

Entry to 30KM/h zone

END OF SPEED LIMIT IMPOSED

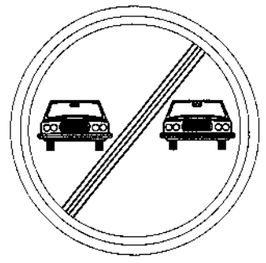

END OF PROHIBITION OF OVFERTAKING

KHYBER PAKHTUNKHWA INTEGRATED TOURISM AND ENTERPRISE DEVELOPMENT PROJECT C&W DEPARTMENT, KP

NATIONAL ENGINEERING SERVICES PAKISTAN (PVT.) LTD.

REV.	DATE	DESCRIPTION	APPROVED

DRAWN
SUBMITTED
RECOMMENDED
CHD./VER.
APPROVED

PROJECT: CONSTRUCTION OF MANKIAL BADA SERA ROAD PROJECT (22 Km)

TITLE: ROAD SIGNS (3) (WARNING SIGN)

DATE: JANUARY, 2021

DWG NO. 38164/102/TD/RS0021

(C1)

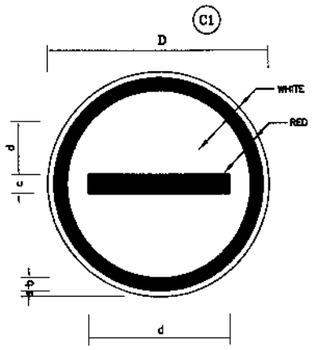

NO ENTRY
DIMENSION(cm)

PARTS	Sign Size	
	90cm	120cm
a	1.0	1.3
b	4.0	5.3
c	8.0	10.7
d	64.0	85.3

(C2)

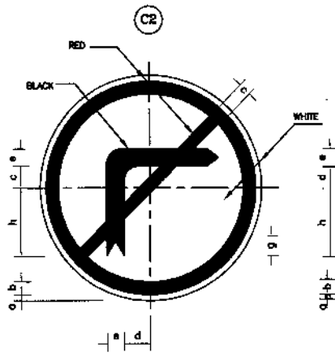

NO RIGHT TURN
DIMENSION(cm)

PARTS	Sign Size	
	90cm	120cm
a	1.0	1.3
b	6.5	8.7
c	5.5	7.3
d	6.0	8.0
e	10.0	13.3
f	25.0	33.3
g	5.0	6.7
h	30.0	40.0

(C3)

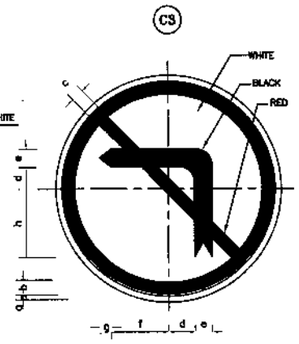

NO LEFT TURN
DIMENSION(cm)

PARTS	SIGN SIZE	
	90cm(C13)	120cm(C7)
a	1.0	1.3
b	6.5	8.7
c	5.5	7.3
d	6.0	8.0
e	10.0	13.3
f	25.0	33.3
g	5.0	6.7
h	30.0	40.0

(C4)

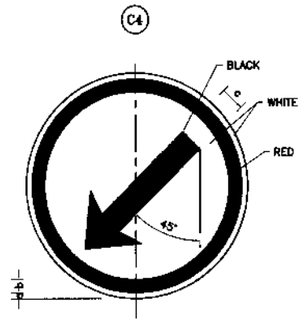

KEEP LEFT
DIMENSION(cm)

PARTS	SIGN SIZE	
	90cm(C4)	120cm(C3)
a	1.0	1.3
b	4.0	5.3
c	8.0	10.7
d	9.0	12.0
e	32.0	42.7
f	23.0	30.7
g	4.5	6.0

(C5)

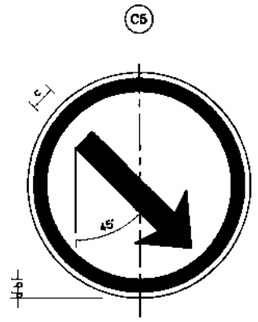

KEEP RIGHT
DIMENSION(cm)

PARTS	SIGN SIZE	
	90cm(C4)	120cm(C3)
a	1.0	1.3
b	4.0	5.3
c	8.0	10.7
d	9.0	12.0
e	32.0	42.7
f	23.0	30.7
g	4.5	6.0

(C6)

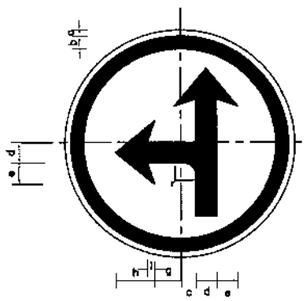

STRAIGHT OR LEFT ONLY SIGN
DIMENSION(cm)

PARTS	SIGN SIZE	
	90cm(C4)	120cm(C3)
a	1.0	1.3
b	6.5	8.7
c	10.0	13.3
d	8.0	10.7
e	9.0	12.0
f	34.0	45.3
g	10.5	14.0
h	23.5	31.3
i	4.5	6.0
r	8.0	10.7

(C8)

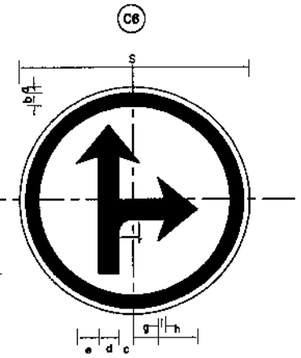

STRAIGHT OR RIGHT ONLY SIGN
DIMENSION(cm)

PARTS	SIGN SIZE	
	90cm(C4)	120cm(C3)
a	1.0	1.3
b	6.5	8.7
c	10.0	13.3
d	8.0	10.7
e	9.0	12.0
f	34.0	45.3
g	10.5	14.0
h	23.5	31.3
i	4.5	6.0
r	8.0	10.7

(C7)

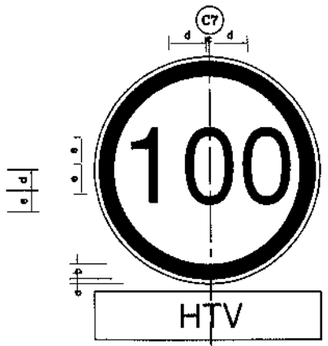

SPEED LIMIT (100)
DIMENSION(cm)

PARTS	SIGN SIZE	
	90cm(C4)	120cm(C3)
a	1.0	1.3
b	6.5	8.7
c	3.0	4.0
d	23.0	30.7
e	20.0	26.7

(C8)

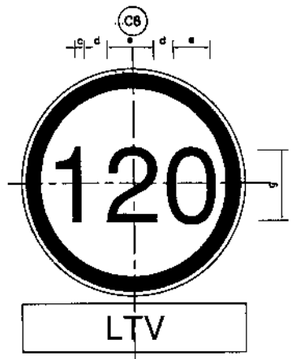

SPEED LIMIT (120)
DIMENSION(cm)

PARTS	Sign Size	
	90cm	120cm
a	1.0	1.3
b	6.5	8.7
c	2.5	3.25
d	5.0	6.5
e	11.25	15.38
f	35.0	47.0
g	40.0	53.5

(C9)

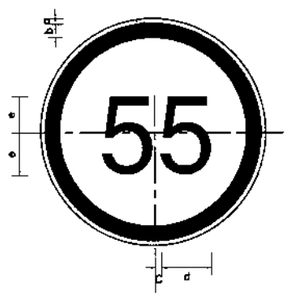

SPEED LIMIT (55)
DIMENSION(cm)

PARTS	Sign Size	
	90cm	120cm
a	1.0	1.3
b	6.5	8.7
c	3.0	4.0
d	23.0	30.7
e	20.0	26.7

(C10)

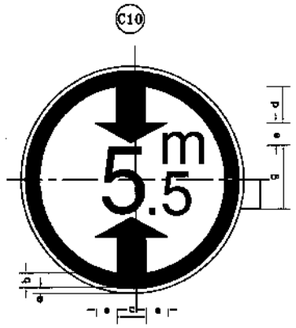

MIN. VERTICAL CLEARANCE
DIMENSION(cm)

PARTS	Sign Size	
	90cm	120cm
a	1.0	1.3
b	6.5	8.7
c	13.5	18.0
d	12.5	17.0
e	8.5	11.5
f	31.0	41.0
g	24.5	32.5
h	12.5	16.5

(C11)

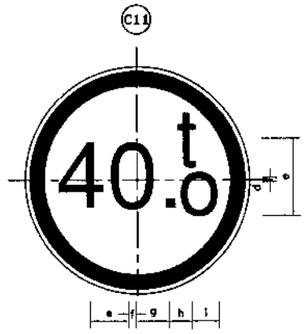

MAX. GROSS WEIGHT LIMIT
DIMENSION(cm)

PARTS	Sign Size	
	90cm	120cm
a	1.0	1.3
b	6.5	8.67
c	32.0	42.50
d	2.5	3.50
e	17.0	22.50
f	1.5	2.0
g	17.0	22.50
h	3.5	4.50
i	10.0	13.50

(C12)

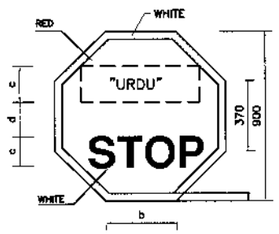

STOP
DIMENSION(cm)

PARTS	Sign Size	
	90cm	120cm
a	1.0	1.30
b	37.0	48.5
c	20.0	25.0
d	15.0	20.0
e	38.0	43.0
f	90.0	120.0

KHYBER PAKHTUNKHWA INTEGRATED TOURISM AND ENTERPRISE DEVELOPMENT PROJECT
C&W DEPARTMENT, KP

NATIONAL ENGINEERING SERVICES PAKISTAN (PVT.) LTD.

REV.	DATE	DESCRIPTION	APPROVED

DRAWN
SUBMITTED
RECOMMENDED
CHD./VER.
APPROVED

PROJECT:
CONSTRUCTION OF MANKIAL BADA SERA ROAD PROJECT (22 Km)

TITLE
ROAD SIGNS (4)
(REGULATORY SIGN)

DATE
JANUARY, 2021

DWG NO.
38164/102/TD/RS0022

R1

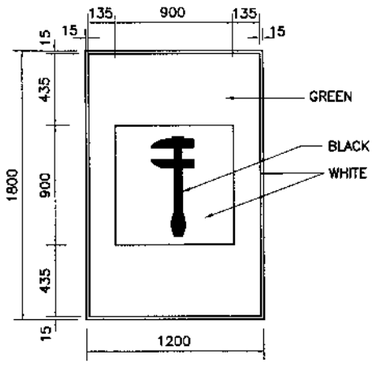

BREAKDOWN SERVICE

R2

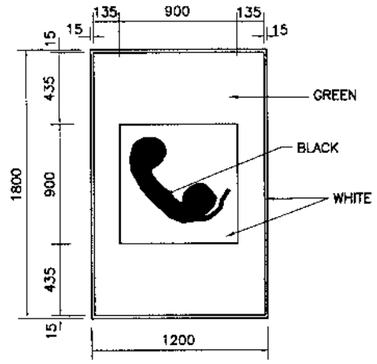

TELEPHONE

R3

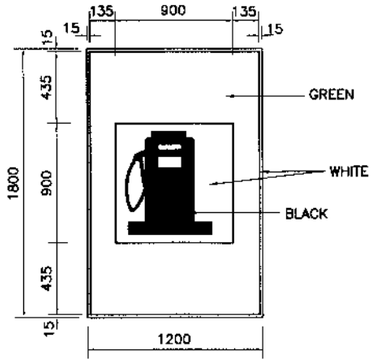

FILLING STATION

R4

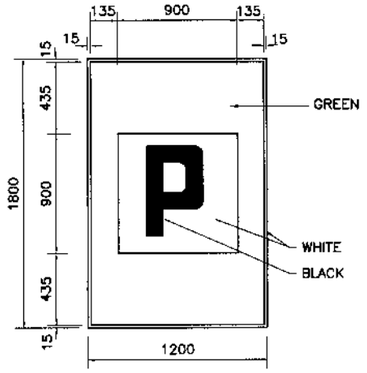

PARKING

R5

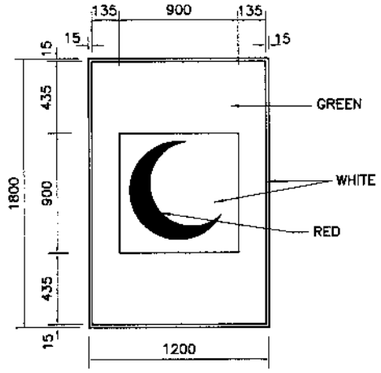

FIRST AID STATION

R6

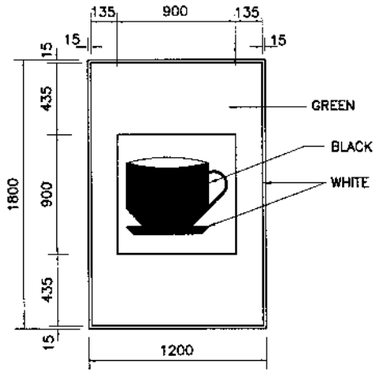

REFRESHMENT/CAFETERIA

R7

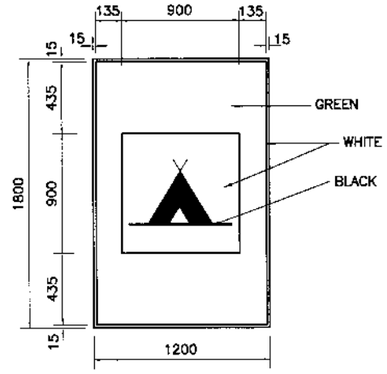

CAMPING SITE

R8

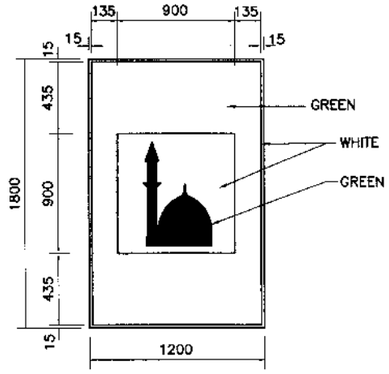

MOSQUE

R9

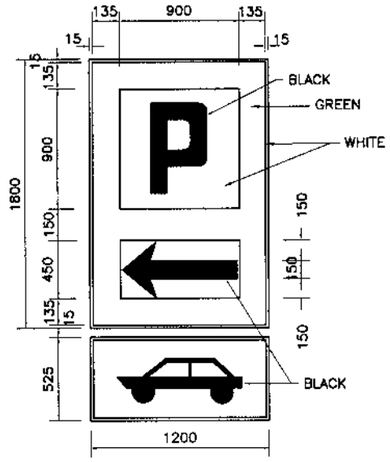

PARKING ON LEFT
(FOR CARS)

R10

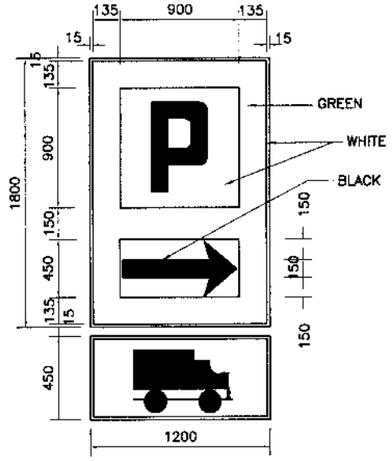

PARKING ON RIGHT
(FOR BUS/TRUCK)

R11

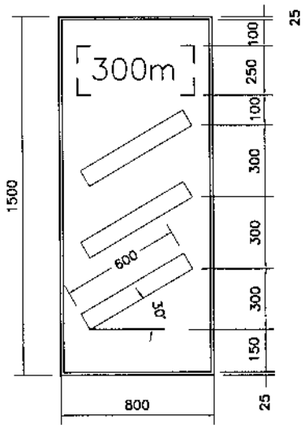

R12

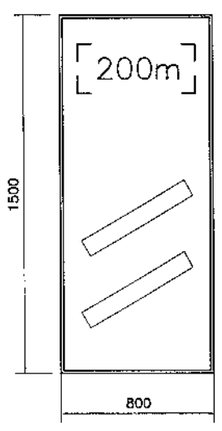

R13

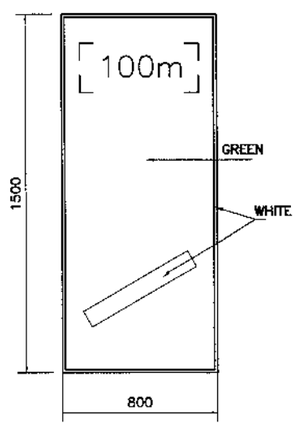

COUNT DOWN MARKERS

M1

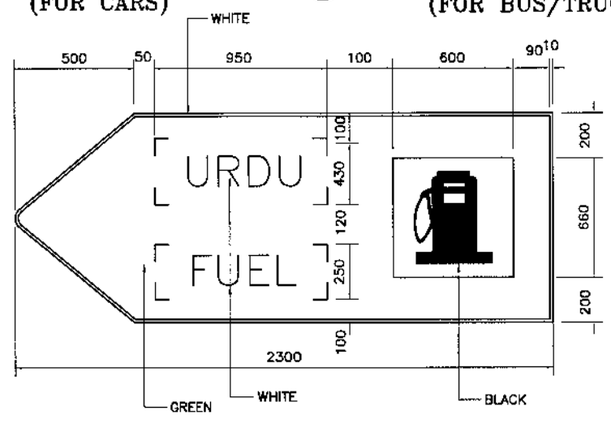

FILLING STATION ON LEFT

KHYBER PAKHTUNKHWA INTEGRATED TOURISM AND ENTERPRISE DEVELOPMENT PROJECT C&W DEPARTMENT, KP	NESPAK NATIONAL ENGINEERING SERVICES PAKISTAN (PVT.) LTD.	REV.	DATE	DESCRIPTION	APPROVED	DRAWN / SUBMITTED / RECOMMENDED / CHD./VER. / APPROVED	PROJECT: CONSTRUCTION OF MANKIAL BADA SERA ROAD PROJECT (22 Km)

TITLE: **ROAD SIGNS (5)**
(INFORMATORY SIGN)

DATE: JANUARY, 2021

DWG NO. 38164/102/TD/RS0023

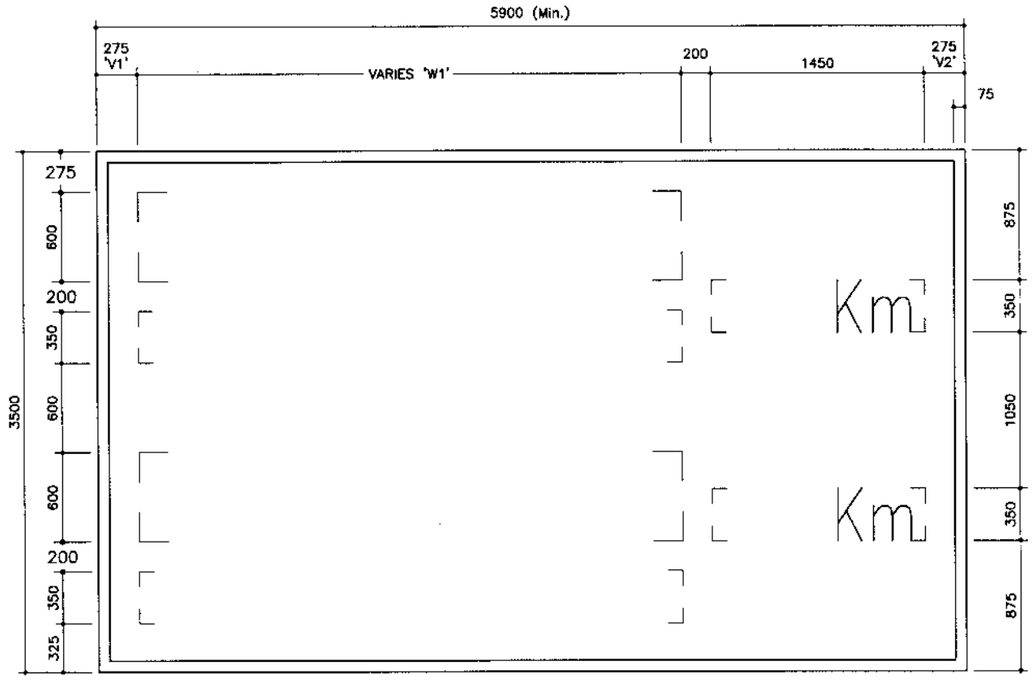

R21

DISTANCE SIGN

(After the junction)

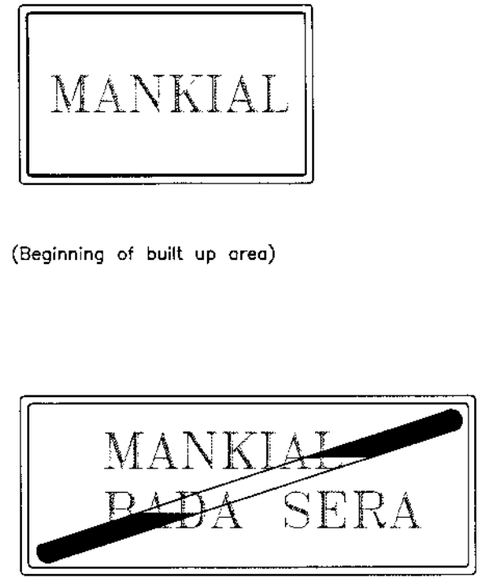

(Beginning of built up area)

(End of built up area)

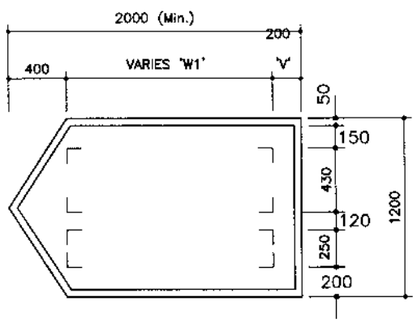

R20

EXIT SIGN

(At exit ramp nose)

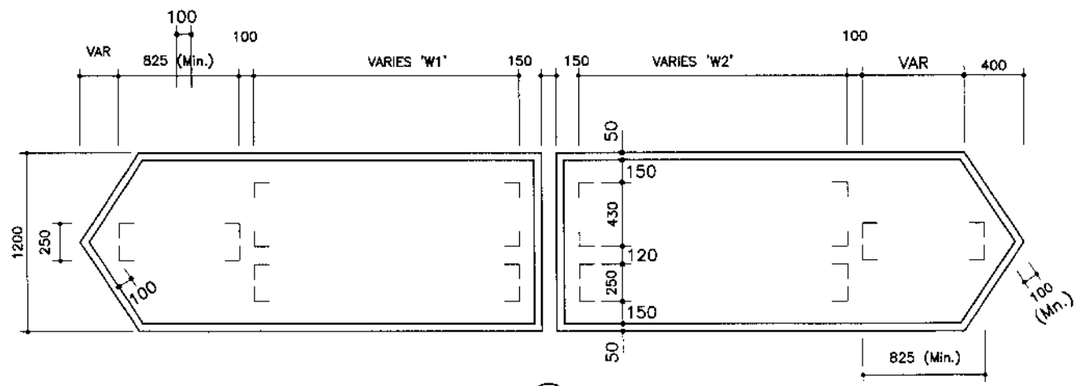

R19

DISTANCE & DESTINATION SIGN

(At T– Junction)

NOTE

FOR NOTES REFER DRAWING NO. 3829/102/TD/RS0026.

KHYBER PAKHTUNKHWA INTEGRATED TOURISM AND ENTERPRISE DEVELOPMENT PROJECT C&W DEPARTMENT, KP	NATIONAL ENGINEERING SERVICES PAKISTAN (PVT.) LTD.					DRAWN		PROJECT: CONSTRUCTION OF MANKIAL BADA SERA ROAD PROJECT (22 Km)	TITLE **ROAD SIGNS (6) (REGULATORY SIGN)**	
						SUBMITTED				
						RECOMMENDED				
						CHD./VER.				
		REV.	DATE	DESCRIPTION	APPROVED	APPROVED			DATE JANUARY, 2021	DWG NO. 38164/102/TD/RS0024

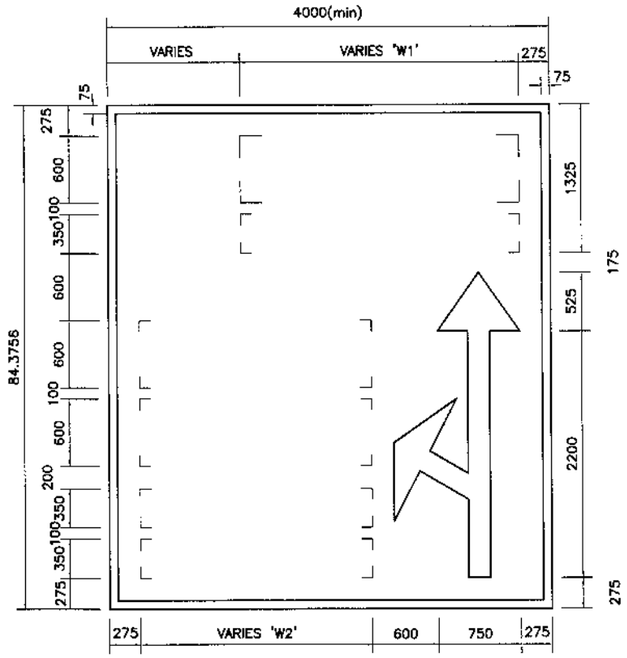

R22

DESTINATION SIGN

(500m SHORT OF EXIT RAMP)

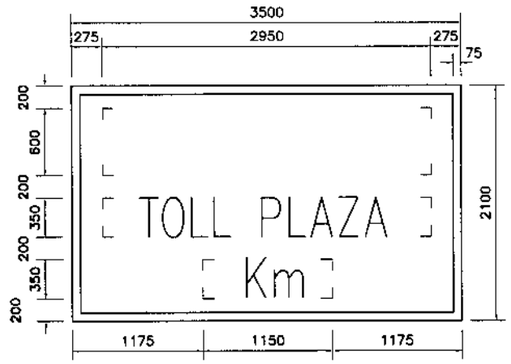

R23

TOLL PLAZA SIGN

(2 Km./1 Km. SHORT OF TOLL PLAZA)

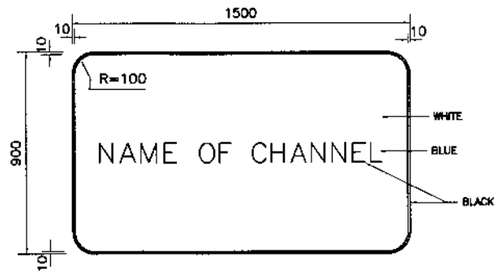

R32

CHANNEL NAME

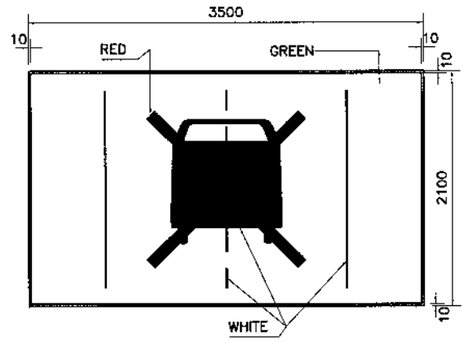

R33

DO NOT DRIVE
ON LANE MARKING

W A R N I N G S I G N

I N F O R M A T O R Y S I G N

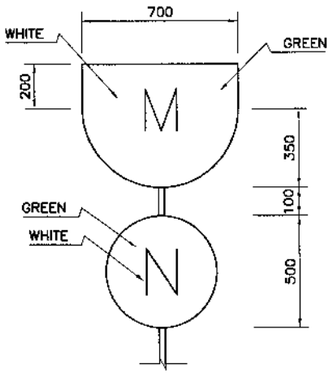

R29

MOTORWAY
NORTH BOUND CARRIAGEWAY

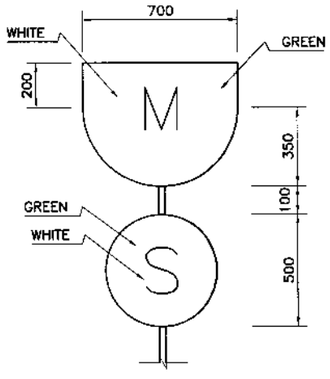

R30

MOTORWAY
SOUTH BOUND CARRIAGEWAY

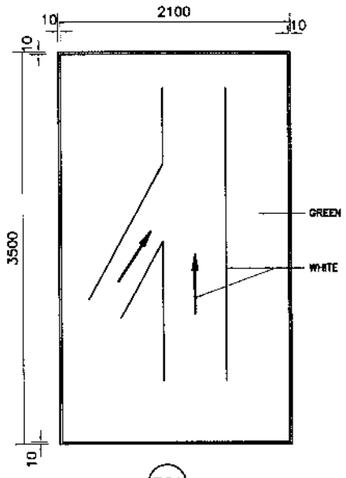

R31

ENTRY LANE AHEAD

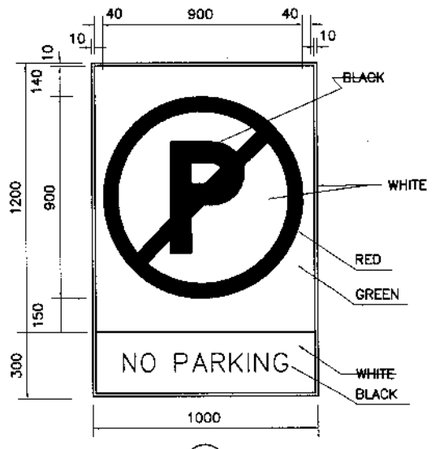

R27

NO PARKING

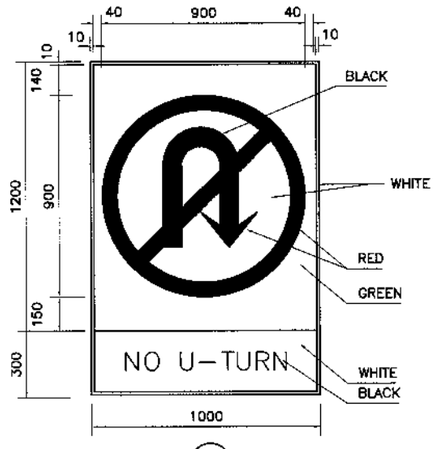

R28

NO U-TURN

I N F O R M A T O R Y S I G N

R E G U L A T O R Y S I G N

KHYBER PAKHTUNKHWA INTEGRATED TOURISM AND ENTERPRISE DEVELOPMENT PROJECT C&W DEPARTMENT, KP	NATIONAL ENGINEERING SERVICES PAKISTAN (PVT.) LTD.				DRAWN	PROJECT: CONSTRUCTION OF MANKIAL BADA SERA ROAD PROJECT (22 Km)	TITLE ROAD SIGNS (7)
					SUBMITTED		
					RECOMMENDED		DATE JANUARY, 2021
					CHD./VER.		DWG NO. 38164/102/TD/RS0025
		REV.	DATE	DESCRIPTION	APPROVED	APPROVED	

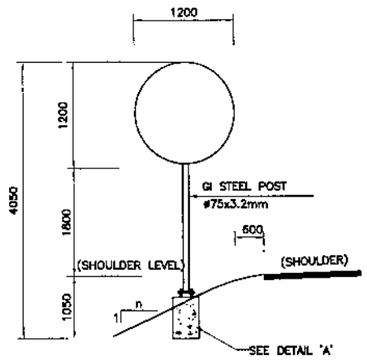

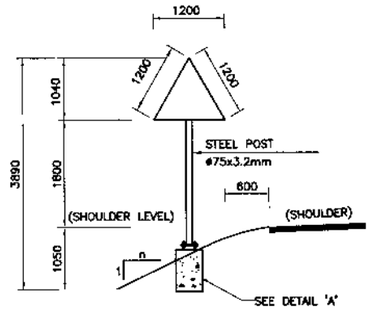

SINGLE SIGNS

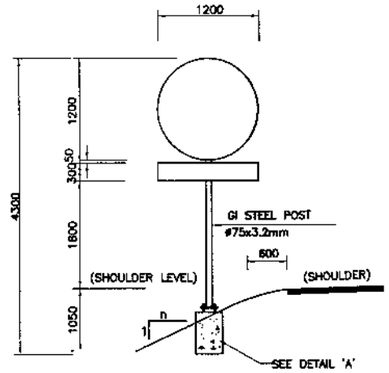

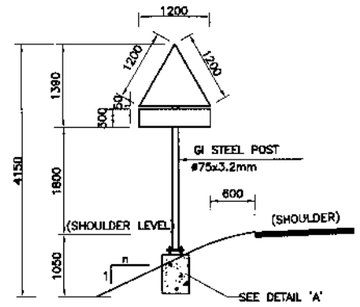

SINGLE SIGNS WITH ADDITIONAL PLATE

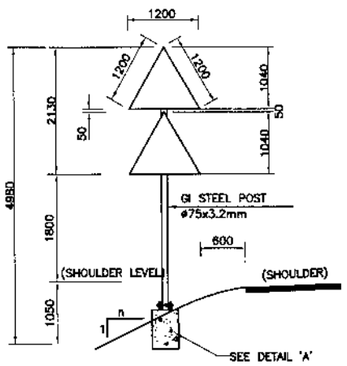

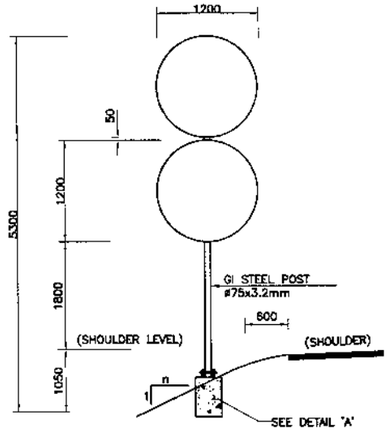

DOUBLE SIGNS

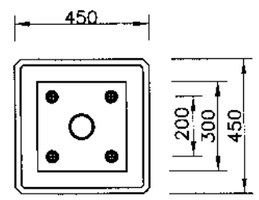

PLAN

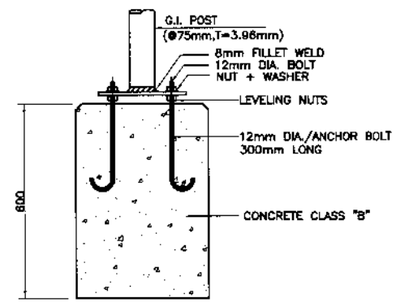

SECTION

PRECAST CONCRETE FOUNDATION
(TYPE-1)
DETAIL 'A'

NOTES:-

1- ALL DIMENSIONS ARE IN MILLIMETERS UNLESS NOTED OTHERWISE.

2- POST LENGTH AS SHOWN ARE FOR EXPRESSWAY SIGNS OF 1200mm NOMINAL SIZE. FOR RAMPS, POST LENGTH SHALL BE ADJUSTED ACCORDINGLY.

3- PRECAST CONCRETE FOUNDATION BLOCKS SHALL BE CAST USING CLASS "B" CONCRETE.

4- SIGN PANELS SHALL BE MADE OF ALUMINUM ALLOY PLATES OF MINIMUM 3mm THICKNESS.

5- FOR ALL TRIANGULAR, CIRCULAR SIGNS AND INFORMATION SIGNS OF LESS THEN 1.5m Sq.m AREA, USE INNER DIA 75mm, 3.2mm THICK CIRCULAR GI POST WITH.

6- ALL SIGN POSTS SHALL BE PAINTED WITH NON-REFLECTORISED BLACK AND WHITE PAINT STRIPES 300mm WIDE.

7- ALL SIGN BACK PANELS SHALL BE PAINTED WITH GRAY ENAMEL PAINT.

8- ALL POSTS SHALL BE 300mm SHORT OF SIGN TOP.

KHYBER PAKHTUNKHWA INTEGRATED TOURISM AND ENTERPRISE DEVELOPMENT PROJECT C&W DEPARTMENT, KP	NATIONAL ENGINEERING SERVICES PAKISTAN (PVT.) LTD.					DRAWN	PROJECT: CONSTRUCTION OF MANKIAL BADA SERA ROAD PROJECT (22 Km)	TITLE: TYPICAL PLACEMENT OF ROAD SIGNS
						SUBMITTED		
						RECOMMENDED		
						CHD./VER.		DATE: JANUARY, 2021 / DWG NO. 38164/102/TD/RS0026
		REV.	DATE	DESCRIPTION	APPROVED	APPROVED		

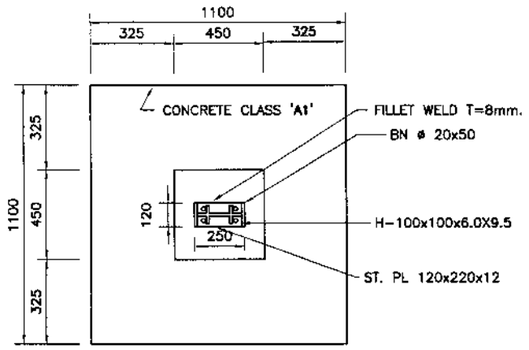

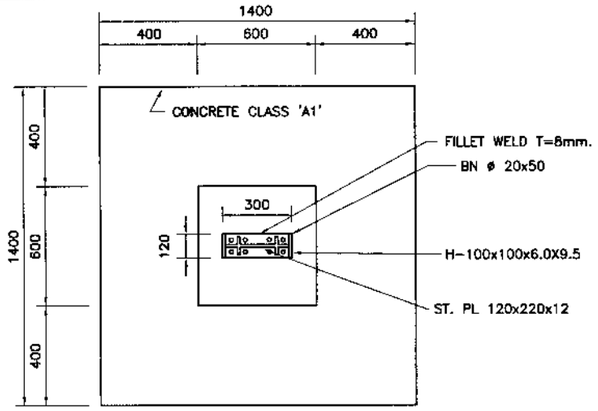

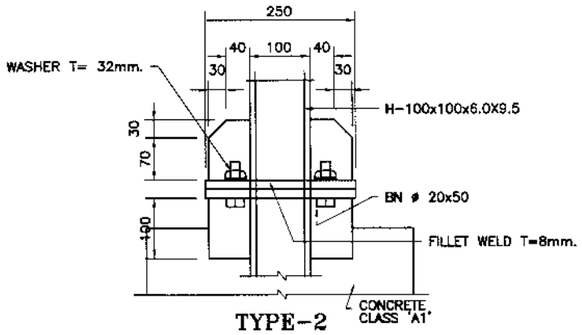

TYPE-2

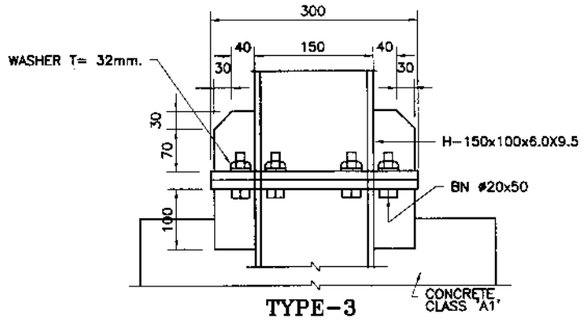

TYPE-3

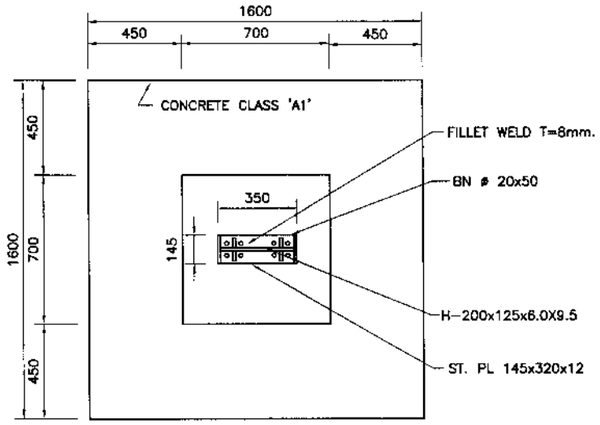

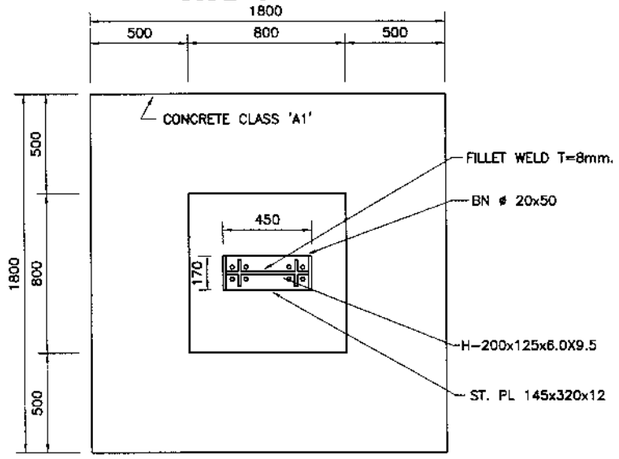

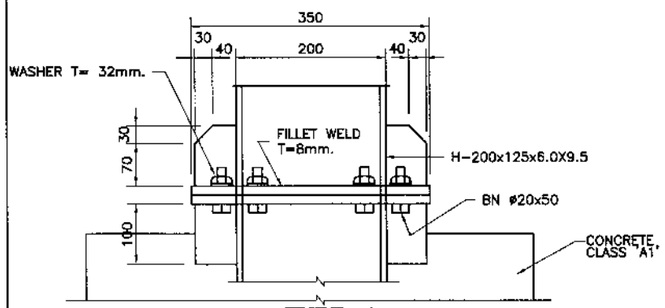

TYPE-4

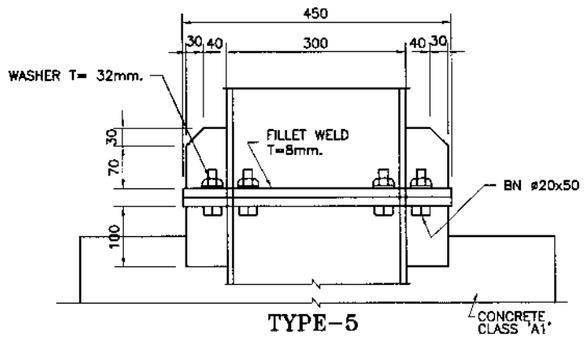

TYPE-5

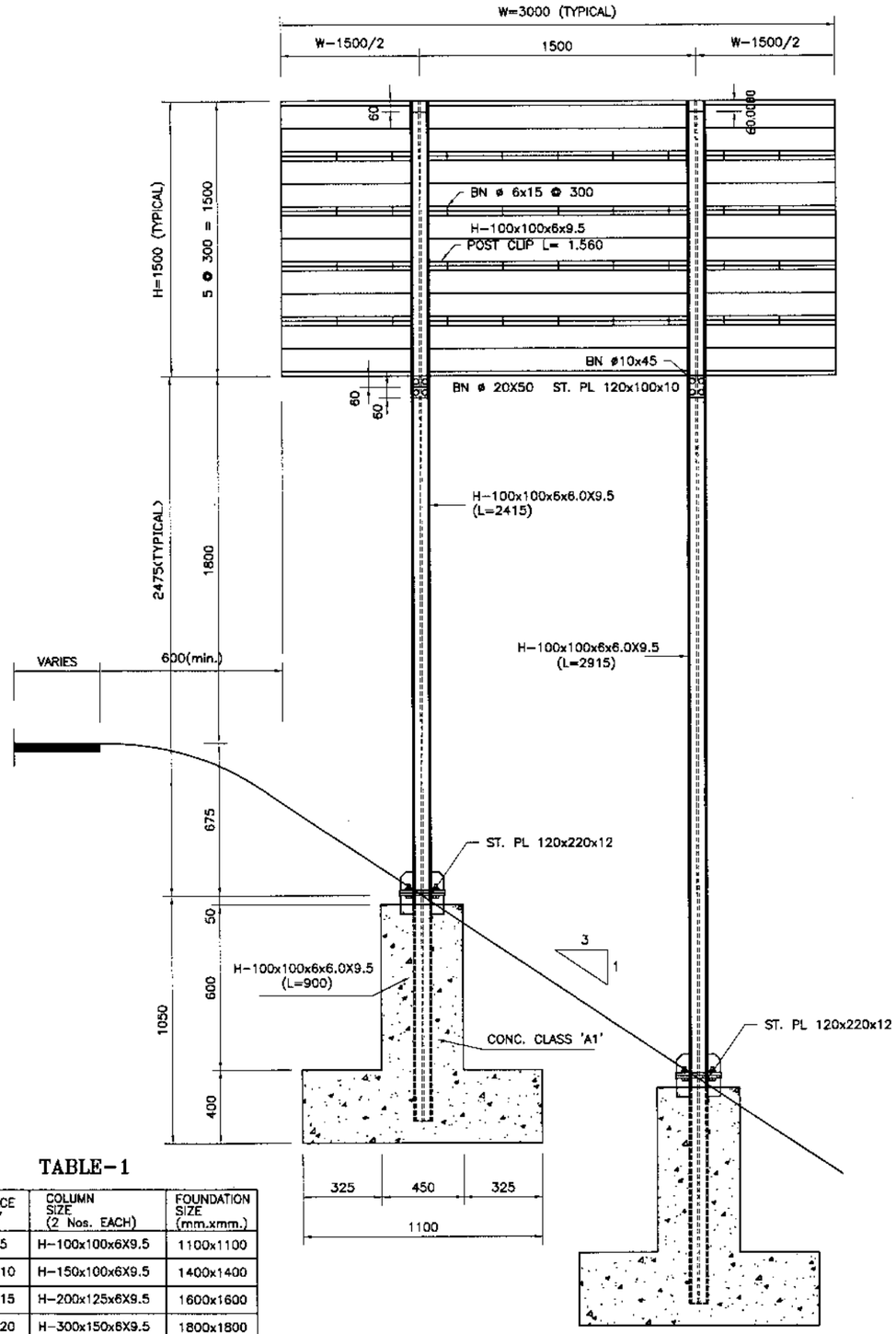

TYPICAL SIGN DETAILS
(FACE AREA <5m²)

TABLE-1

SIGN FACE AREA 'A'	COLUMN SIZE (2 Nos. EACH)	FOUNDATION SIZE (mm.xmm.)
3 < A<5	H-100x100x6X9.5	1100x1100
5 < A<10	H-150x100x6X9.5	1400x1400
10< A<15	H-200x125x6X9.5	1600x1600
15< A<20	H-300x150x6X9.5	1800x1800

KHYBER PAKHTUNKHWA INTEGRATED TOURISM AND ENTERPRISE DEVELOPMENT PROJECT
C&W DEPARTMENT, KP

NATIONAL ENGINEERING SERVICES PAKISTAN (PVT.) LTD.

REV.	DATE	DESCRIPTION	APPROVED	
				DRAWN
				SUBMITTED
				RECOMMENDED
				CHD./VER.
				APPROVED

PROJECT:
CONSTRUCTION OF MANKIAL BADA SERA ROAD PROJECT (22 Km)

TITLE
ROAD SIGNS FIXATION DETAILS (2)

DATE
JANUARY, 2021

DWG NO.
38164/102/TD/RS0027

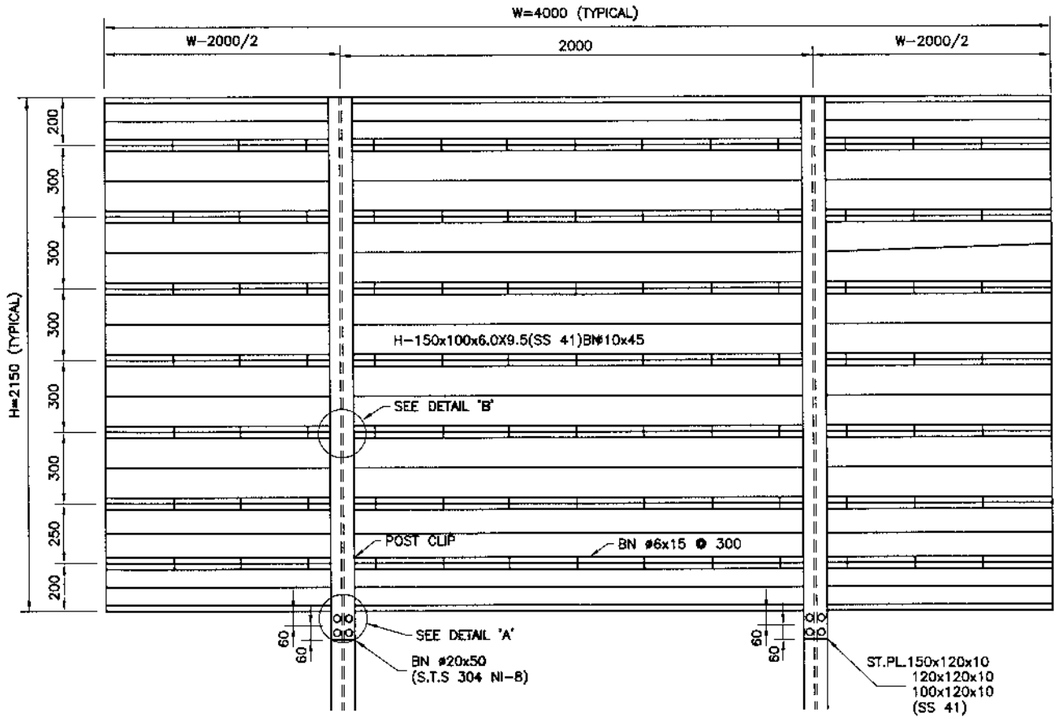

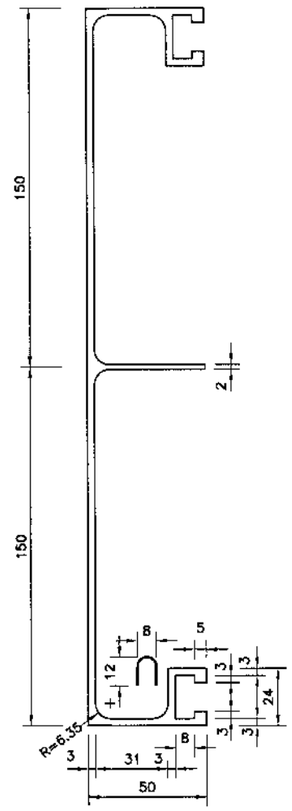

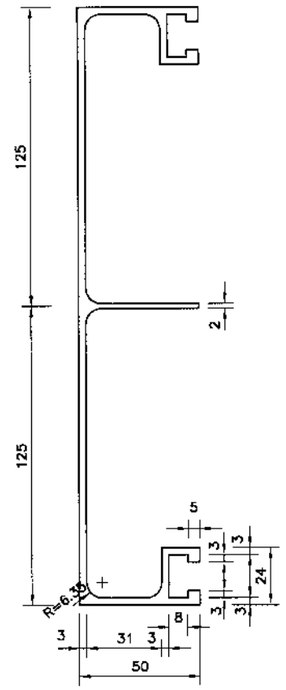

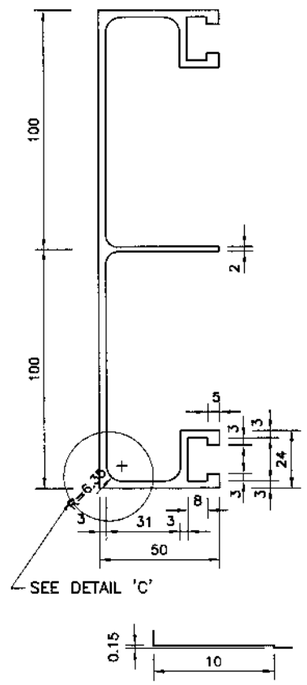

ALUMINUM CHANNEL DETAILS

DETAIL 'C'

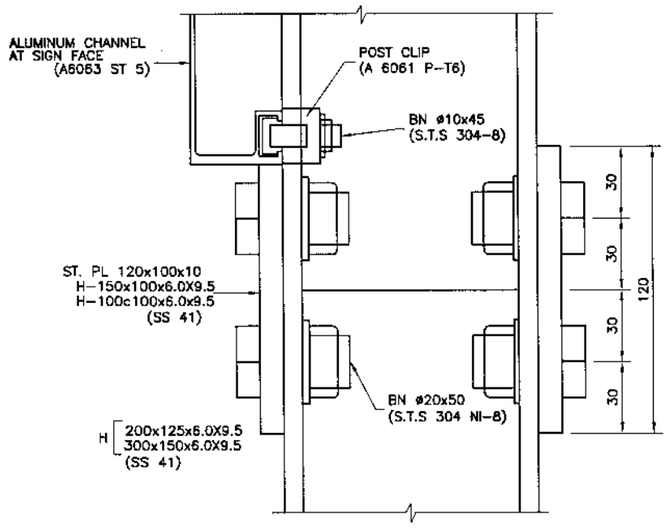

DETAIL 'A'

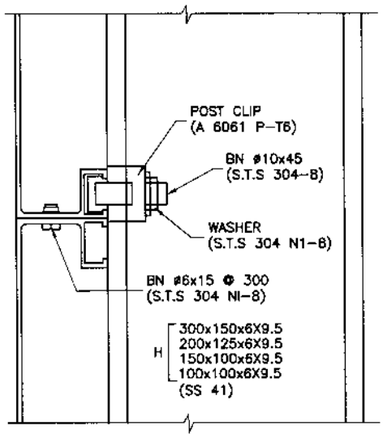

DETAIL 'B'

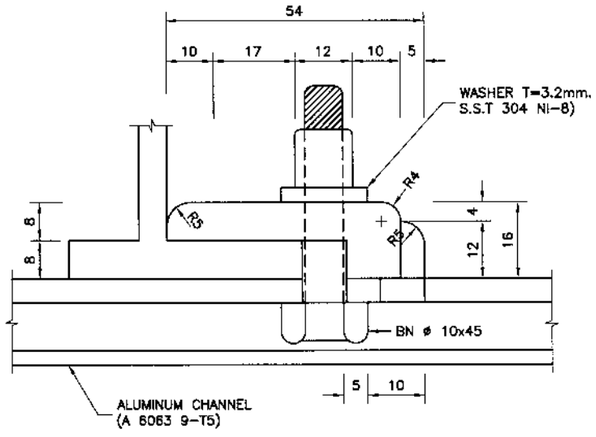

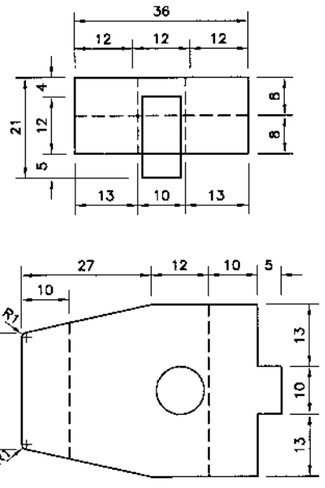

ALUMINUM POST CLIP DETAIL

NOTES:-

1 - ALL DIMENSIONS ARE IN MILLIMETERS

KHYBER PAKHTUNKHWA INTEGRATED TOURISM AND ENTERPRISE DEVELOPMENT PROJECT C&W DEPARTMENT, KP	NATIONAL ENGINEERING SERVICES PAKISTAN (PVT.) LTD.			DRAWN	PROJECT: CONSTRUCTION OF MANKIAL BADA SERA ROAD PROJECT (22 Km)
				SUBMITTED	
				RECOMMENDED	
				CHD./VER.	
	REV.	DATE	DESCRIPTION	APPROVED	APPROVED

TITLE: **ROAD SIGNS FIXATION DETAILS (3)**

DATE: JANUARY, 2021

DWG NO. 38164/102/TD/RS0028

PAVEMENT MARKING LINES

SCALE 1:200

FOR DIMENSIONS L & W1 TO W5 (SEE TABLE-1)

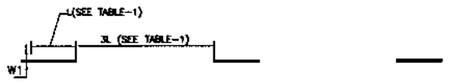

L1 – BROKEN GUIDE LINE–WHITE

AT CENTERLINE OF DIVIDED (SINGLE) 2–LANE HWYS AND LANE SEPARATION OF DIVIDED (DUAL) HWYS

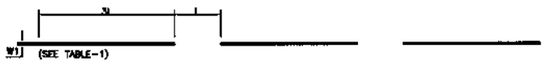

L2 –BROKEN WARNING LINE –WHITE

AT APPROACHES TO DANGER (e.g roundabouts, median openings and junctions)

L3 – CONTINUOUS LINE – WHITE

AT CENTERLINE NEAR INTERSECTIONS AND AT NO PASSING ZONES

L4 – CONTINUOUS EDGE LINE –YELLOW

AT EDGE OF PAVEMENT OF ALL HWYS

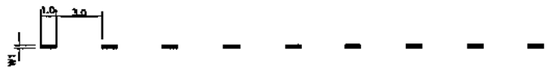

L5 – DASHED LINE – WHITE

AT SEPERATION OF THROUGH LANES FROM ACCELERATION/DECELERATION LANE

L6 – DOTTED LINE – WHITE

FOR DEFINING VEHICLE PATHS WITHIN INTERSECTIONS

L7 – STOP LINE – WHITE

AT INTERSECTIONS ACROSS PAVEMENT

L8 – TRANSVERSE YIELD LINE – WHITE

AT INTERSECTIONS ACROSS PAVEMENT IN THE SAME POSITION AS L7 LINE TO INDICATE GIVE WAY

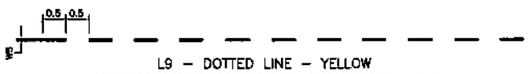

L9 – DOTTED LINE – YELLOW

FOR EDGE LINE WHERE PARKING BAYS ARE PROVIDED OUTSIDE THE LANE

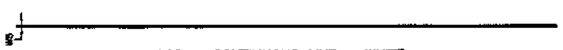

L10 – CONTINUOUS LINE – WHITE

FOR DELINEATION OF LIMITS OF PARKING BAYS

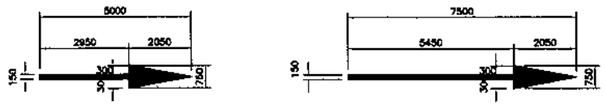

ARROWS TYPE–I (STRAIGHT)

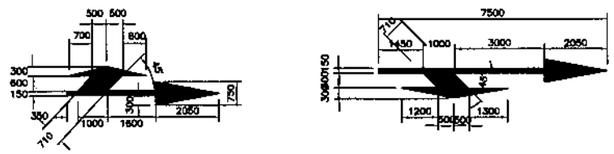

ARROWS TYPE–II (COMBINED)

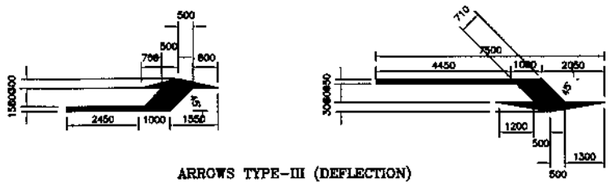

ARROWS TYPE–III (DEFLECTION)

(FOR <60 Km/hr) (FOR >60 Km/hr)

LANE SELECTION ARROWS – WHITE

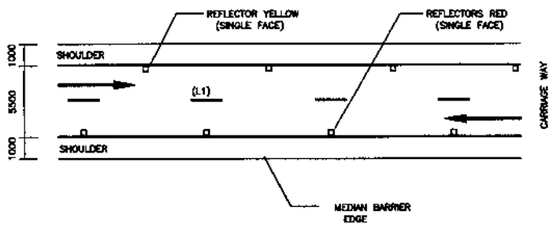

ADDITIONAL DETAIL FOR MEDIAN AND CARRIAGE WAY

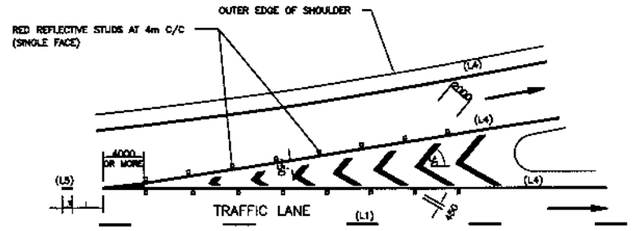

ENTRANCE NOSE DETAIL

SCALE 1:300

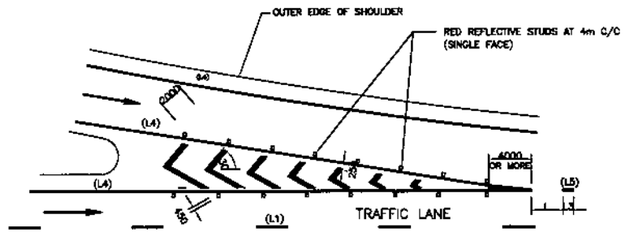

EXIT NOSE DETAIL

SCALE 1:300

PAVEMENT MARKING & ROAD STUDS DETAILS

TABLE – 1

ROADWAY SPEED	L (mm)	W1	W2	W3	W4	W5
>120 Km/hr	4000	200	200	200	400	100

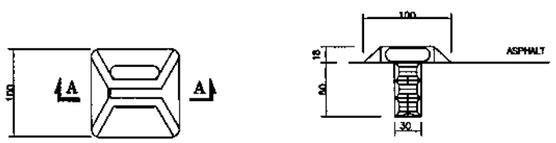

PLAN SECTION A–A

REFLECTORISED PAVEMENT STUD
(RAISED PROFILE TYPE)

NOTES :–

1. ALL DIMENSIONS ARE IN MILLIMETERS.
2. AT APPROACHES TO INTERSECTIONS/ROUNDABOUTS, CENTER LINE OR LANE SEPARATION LINE (L1) BECOMES (L2) FOR A LENGTH = 150m AND CONTINUOUS LINE (L3) FOR LAST 50m.
3. LENGTH OF STORKE IN (L2) = LENGTH OF GAP IN MATCHING (L1).
4. LOCATION OF DIRECTIONAL ARROWS, NOSES AND STOP SIGN SHALL BE PLACED AS DIRECTED BY THE ENGINEER.

KHYBER PAKHTUNKHWA INTEGRATED TOURISM AND ENTERPRISE DEVELOPMENT PROJECT C&W DEPARTMENT, KP

NATIONAL ENGINEERING SERVICES PAKISTAN (PVT.) LTD.

REV.	DATE	DESCRIPTION	APPROVED	APPROVED

DRAWN
SUBMITTED
RECOMMENDED
CHD./VER.

PROJECT: CONSTRUCTION OF MANKIAL BADA SERA ROAD PROJECT (22 Km)

TITLE: PAVEMENT MARKING AND ROAD STUDS

DATE: JANUARY, 2021

DWG NO. 38164/102/TD/PMS0029

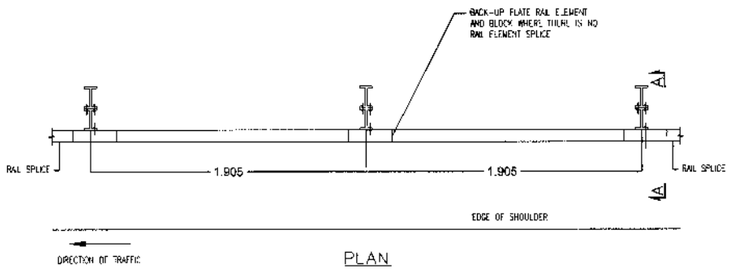

PLAN

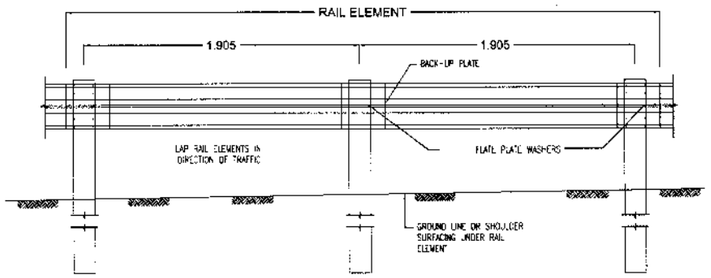

METAL W-BEAM GUARD RAILING WITH W150x13.5
STEEL POSTS AND BLOCKS

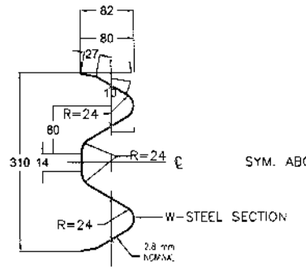

SECTION THROUGH
W-BEAM RAIL ELEMENT

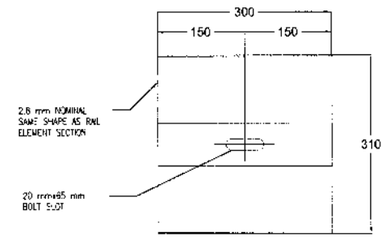

W-BEAM BACK-UP PLATE

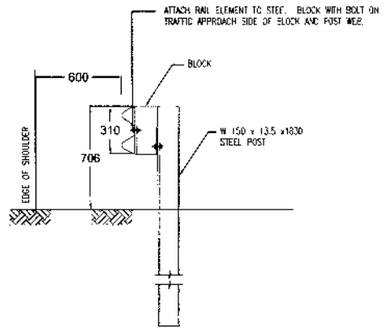

SECTION A–A
POST SPACING 1.905m C/C

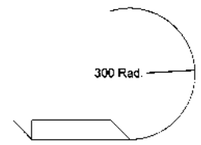

APPLICABLE REACHES

GUARD RAIL SHALL BE PROVIDED ADDITIONALLY ON CULVERT APPROACHES AND AT CRITICAL LOCATIONS/SHARP BENDS.

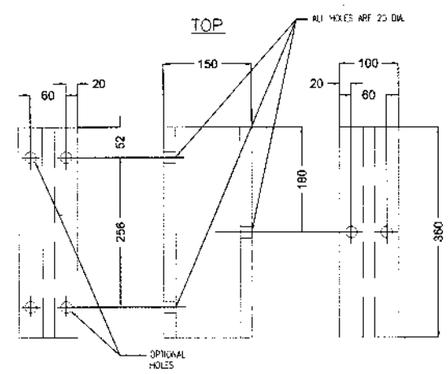

W-BEAM GUARD RAIL BLOCK

NOTES

1. ALL DIMENSIONS ARE IN MILLIMETERS. UNLESS NOTED OTHERWISE.
2. ALL LAPS SHALL BE IN THE DIRECTION OF TRAFFIC.
3. W–BEAM TERMINAL SECTIONS SHALL BE USED IN PLACE OF END ANCHORAGE RAIL AT THE DEPARTURE END ONLY OR AT OTHER RESTRICTED LOCATIONS AS APPROVED BY THE ENGINEER.
4. W–BEAM RAIL SECTION SHALL CONFORM TO AASHTO M–180 AND SHALL BE TYPE–II, CLASS 'B'.
5. WHERE THE GUARD RAIL HAS TO FOLLOW A CURVE OF LESS THAN 45m RADIUS, THE BEAM SHALL BE CURVED TO SUIT, BY THE BEAM MANUFACTURER.
6. THE HOLES FOR ANCHORAGE POSTS SHALL BE BACKFILLED WITH WELL COMPACTED GRANULAR MATERIAL. THE SPACE INSIDE THE TERMINAL NOSE SHALL BE FILLED WITH CONCRETE. CLASS 20
7. THE CONTRACTOR SHALL PREPARE DRAWINGS SHOWING LOCATIONS, ELEVATIONS AND SPACING OF POSTS AT EACH CULVERT/HIGH FILL LOCATION AND SHALL OBTAIN APPROVAL OF THE ENGINEER
8. BACKFILLING OF THE POST HOLES SHALL BE CARRIED OUT AS FOLLOWS:
   - IN CASE OF ROCK, CORED HOLES–250 DIA (AS MADE) WILL BE BACKFILLED WITH LEAN CONCRETE CLASS 15
   - IN CASE OF STRATA OTHER THAN ROCK, HOLES–300 DIA (AS MADE) WILL BE BACKFILLED WITH LEAN CONCRETE CLASS 15 OR THE POSTS MAY BE HAMMERED IN PLACE AS APPROVED BY THE ENGINEER.

   NO EXTRA PAYMENT SHALL BE MADE TO THE CONTRACTOR FOR CORING AND OR CONCRETING FOR POST FIXATION.
9. EXISTING EMBANKMENT MAY BE WIDENED WHERE NECESSARY TO ACCOMMODATE GUARD RAIL FLARE AT APPROACH END.
10. BACK–UP PLATE TO BE USED BETWEEN GUARD RAIL ELEMENT AND STEEL BLOCK ON STEEL POST WHERE THERE IS NO RAIL ELEMENT SPLICE.
11. DIRECTION OF TRAFFIC INDICATED BY ARROW (⟶).
12. POST SPACING AND HEIGHT IS AS PER TYPE OF RAIL SPECIFIED IN HIGHWAY DESIGN STANDARDS SECTION 15.
13. THE RAIL ELEMENT CONNECTING POST NOS. 1, 2, AND AND 3 HAS A COMPOUND BEND WITH A RADIUS OF 11.3m BETWEEN POST NOS. 1 AND 2, AND A RADIUS OF 20.1m BETWEEN POST NOS. 2 AND 3. THE RADIUS CHANGES AT POST NO. 2.
14. SHELF ANGLES TO SUPPORT THE RAIL ELEMENT SHALL BE INSTALLED ON POST NOS. 2, 3, 4, 5 AND 6 OF THE FLARE. SEE DWG. NO. 3829/102/CD/GR0034
15. FOR GUARD RAIL EXTENDED INTO CUT BANK, THE THE POSTS INSTALLED ON SLOPES GREATER THAN 10:1, SHOULD BE 2400 LONG.
16. THE FLARE RATE FOR THE GUARD RAIL EXTENDED INTO CUT BANKS MAY BE INCREASED AFTER CROSSING THE DITCH BOTTOM (AT THE ANGLE POINT), TO SHORTEN THE LENGTH OF TERMINAL (UPTO 8:1).
17. TYPE NO.2 WOULD BE USED ON THE TRAIL END OF A 1WAY SINGLE CARRIAGEWAY. AND ON THE TRAIL END FOR A DUAL CARRIAGEWAY.
18. MINOR ADJUSTMENTS TO POST SPACING AND OFFSETS MAY BE REQUIRED TO FIT SITE CONDITIONS

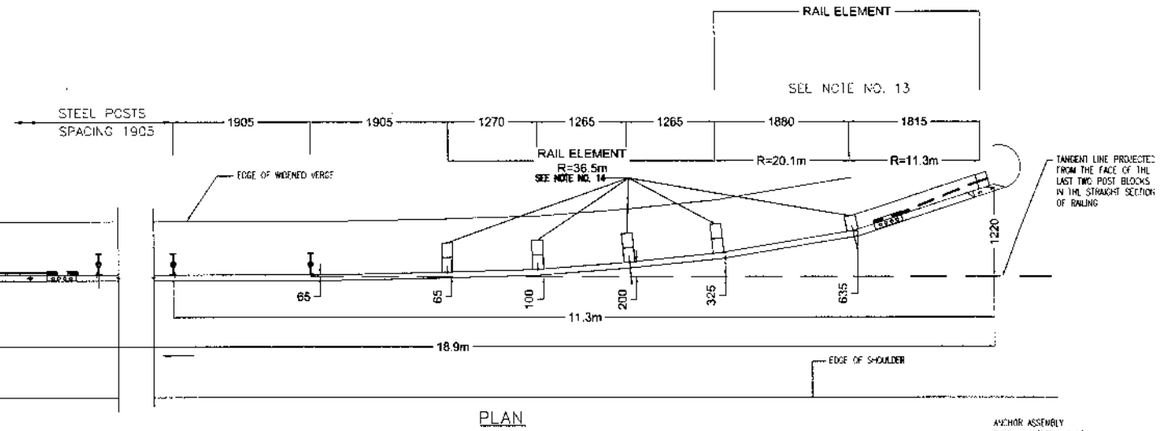

PLAN

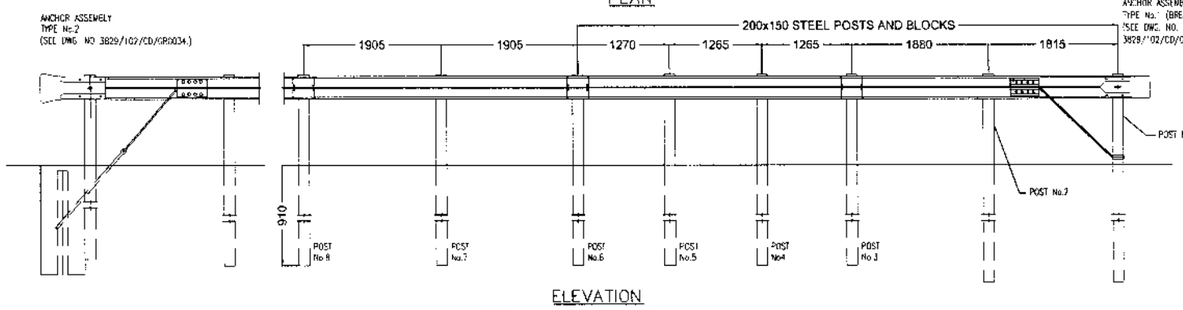

ELEVATION
APPROACH FLARE AND END ANCHORS

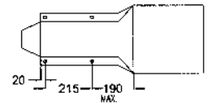

ELEVATION
TERMINAL SECTION TYPE No. 1
W–BEAM

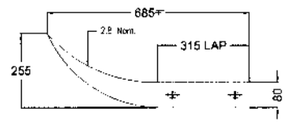

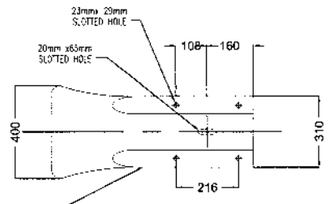

ELEVATION
TERMINAL SECTION TYPE No.2
W–BEAM

				DRAWN	
				SUBMITTED	
				RECOMMENDED	
				CHD./VER.	
REV.	DATE	DESCRIPTION	APPROVED	APPROVED	

KHYBER PAKHTUNKHWA INTEGRATED TOURISM AND ENTERPRISE DEVELOPMENT PROJECT
C&W DEPARTMENT, KP

NATIONAL ENGINEERING SERVICES PAKISTAN (PVT.) LTD.

PROJECT:
CONSTRUCTION OF MANKIAL BADA SERA ROAD PROJECT (22 Km)

TITLE
TYPICAL GUARD RAIL DETAILS (1)

DATE: JANUARY, 2021

DWG NO. 38164/102/TD/GR0030

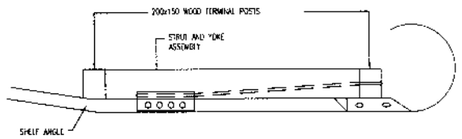

PLAN

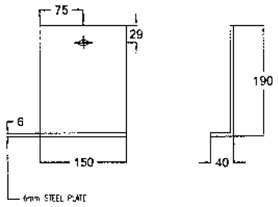

SHELF ANGLE

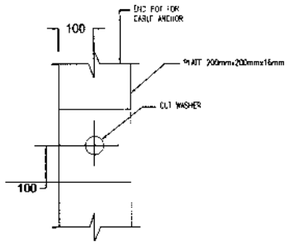

BEARING PLATE DETAIL

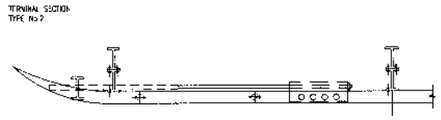

PLAN

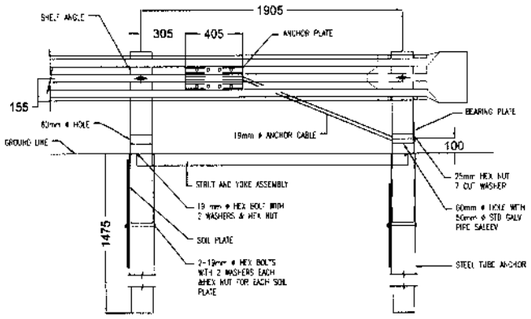

ELEVATION

ANCHORS ASSEMBLY
TYPE NO.1 (BREAKAWAY)

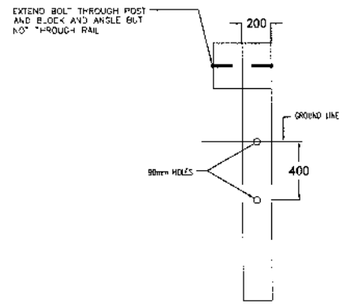

BREAKAWAY POST

(POST NO. 2, 3, 4, 5, AND 6)

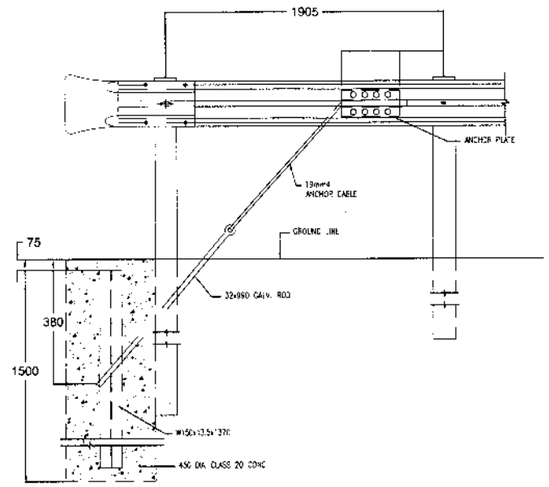

ELEVATION

ANCHORS ASSEMBLY
TYPE NO.2

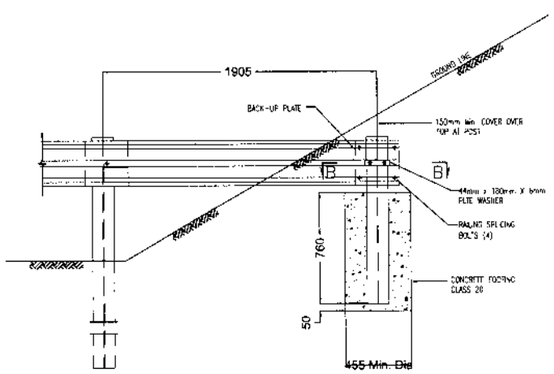

ELEVATION

BURIED POST ANCHOR

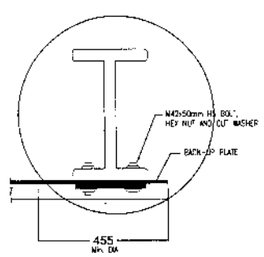

SECTION B – B

NOTES

1. ALL DIMENSIONS ARE IN MILLIMETERS. UNLESS NOTED OTHERWISE.
2. THIS DRAWING SHALL BE READ IN CONJUNCTION WITH DWG. NO. 38164/102/TD/GR0030.)
3. THE LAYOUT AND DETAILS SHOWN ON THIS PLAN ARE INDICATIVE ONLY OF THE VARIOUS POSSIBILITIES AVAILABLE FOR THE APPROACH AND TAIL ENDS FOR GUARD RAIL INSTALLATION.
4. IN CASE SOLID ROCK IS ENCOUNTERED, THE POST MAY BE SHORTENED, PROVIDED IT EXTENDS INTO THE SOLID ROCK A MIN. OF 900mm.

KHYBER PAKHTUNKHWA INTEGRATED TOURISM AND ENTERPRISE DEVELOPMENT PROJECT C&W DEPARTMENT, KP

NATIONAL ENGINEERING SERVICES PAKISTAN (PVT.) LTD.

REV.	DATE	DESCRIPTION	APPROVED		
				DRAWN	
				SUBMITTED	
				RECOMMENDED	
				CHD./VER.	
				APPROVED	

PROJECT: CONSTRUCTION OF MANKIAL BADA SERA ROAD PROJECT (22 Km)

TITLE: TYPICAL GUARD RAIL DETAILS (2)

DATE: JANUARY, 2021

DWG NO. 38164/102/TD/GR0031

TYPICAL CROSS SECTION FOR FLEXIBLE PAVEMENT

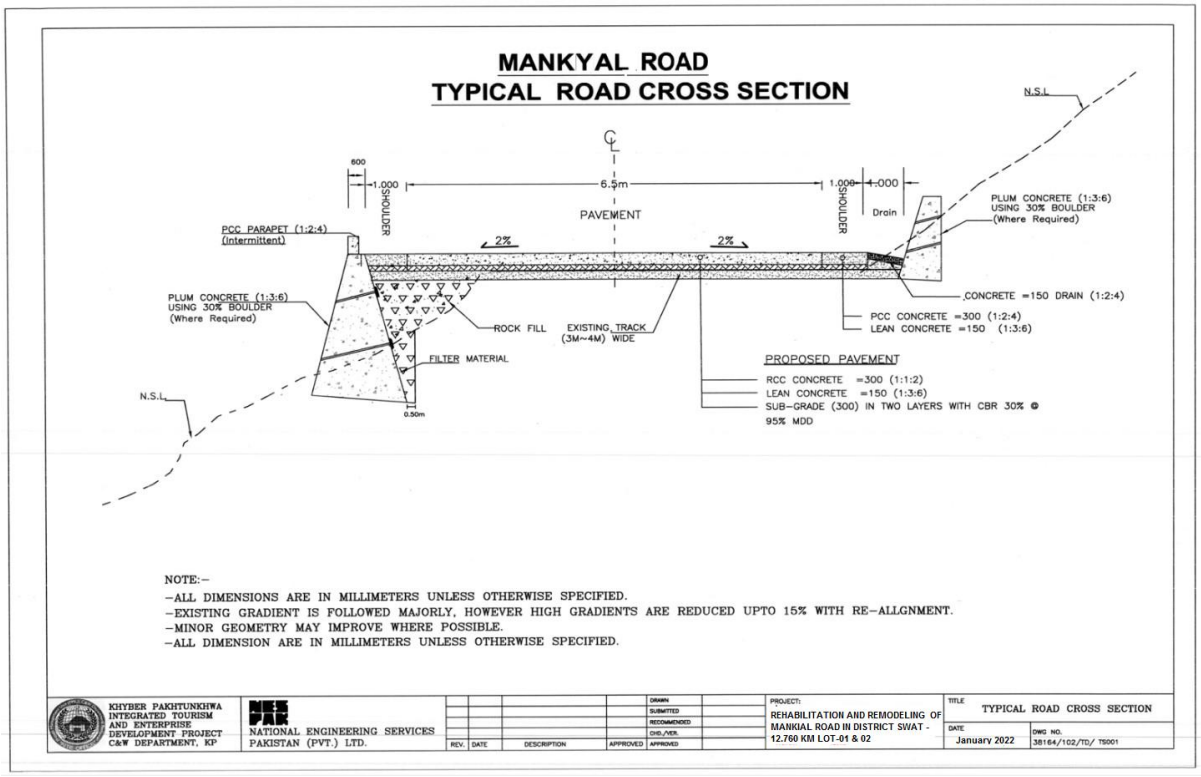

NOTE:–
–ALL DIMENSIONS ARE IN MILLIMETERS UNLESS OTHERWISE SPECIFIED.
–EXISTING GRADIENT IS FOLLOWED MAJORLY, HOWEVER HIGH GRADIENTS ARE REDUCED UPTO 15% WITH RE–ALLGNMENT.
–MINOR GEOMETRY MAY IMPROVE WHERE POSSIBLE.
–ALL DIMENSION ARE IN MILLIMETERS UNLESS OTHERWISE SPECIFIED.

KHYBER PAKHTUNKHWA INTEGRATED TOURISM AND ENTERPRISE DEVELOPMENT PROJECT C&W DEPARTMENT, KP	NATIONAL ENGINEERING SERVICES PAKISTAN (PVT.) LTD.	REV.	DATE	DESCRIPTION	APPROVED	DRAWN / SUBMITTED / RECOMMENDED / CHD./VER. / APPROVED	PROJECT: REHABILITATION AND REMODELING OF MANKIAL ROAD IN DISTRICT SWAT - 12.760 KM LOT-01 & 02	TITLE: TYPICAL ROAD CROSS SECTION; DATE: January 2022; DWG NO. 38164/102/TD/ TS001